AVALON Hybrid

Hybrid
2013 Model
Emergency Response Guide

© 2012 Toyota Motor Corporation
All rights reserved. This document may not be
altered without the written permission of Toyota Motor Corporation.

13 Toyota AVALON Hybrid ERG REV – (12/9/28)

Foreword

In November 2012, Toyota released the 2013 Toyota AVALON Hybrid gasoline-electric hybrid vehicle in North America. To educate and assist emergency responders in the safe handling of the AVALON Hybrid technology, Toyota published this AVALON Hybrid Emergency Response Guide.

High voltage electricity powers the electric motor, generator, air conditioning (A/C) compressor and inverter/converter. All other automotive electrical devices such as the head lights, radio, and gauges are powered from a separate 12 Volt auxiliary battery. Numerous safeguards have been designed into the AVALON Hybrid to help ensure the high voltage, approximately 244.8 Volt, Nickel Metal Hydride (NiMH) Hybrid Vehicle (HV) battery pack is kept safe and secure in an accident.

The AVALON Hybrid utilizes the following electrical systems:

- Maximum 650 Volts AC
- Nominal 244.8 Volts DC
- Nominal 12 Volts DC

AVALON Hybrid Features:

- A boost converter in the inverter/converter that boosts the available voltage to the electric motor to 650 Volts.
- A high voltage Hybrid Vehicle (HV) battery pack rated at 244.8 Volts.
- A high voltage motor driven Air Conditioning (A/C) compressor rated at 244.8 Volts.
- A body electrical system rated at 12 Volts, negative chassis ground.
- Supplemental Restraint System (SRS) – dual stage frontal airbags, knee airbags, front and rear seat side airbags, side curtain airbags, and front outer seat belt pretensioners.

High voltage electrical safety remains an important factor in the emergency handling of the AVALON Hybrid Hybrid Synergy Drive. It is important to recognize and understand the disabling procedures and warnings throughout the guide.

Additional topics in the guide include:

- AVALON Hybrid identification.
- Major Hybrid Synergy Drive component locations and descriptions.
- Extrication, fire, recovery, and additional emergency response information.
- Roadside assistance information.

2013 Model Year AVALON Hybrid

This guide is intended to assist emergency responders in the safe handling of an AVALON Hybrid vehicle during an incident.

NOTE:
Emergency Response Guides for Toyota hybrid and alternative fuel vehicles may be viewed at http://techinfo.toyota.com.

Table of Contents

	Page
About the AVALON Hybrid	1
AVALON Hybrid Identification	2
Hybrid Synergy Drive Component Locations & Descriptions	5
Smart Key System	8
Hybrid Synergy Drive Operation	10
Hybrid Vehicle (HV) Battery Pack	12
Low Voltage Battery	13
High Voltage Safety	14
SRS Airbags & Seat Belt Pretensioners	15
Emergency Response	17
Extrication	18
Fire	23
Overhaul	24
Recovering/Recycling of NiMH HV Battery Pack	24
Spills	25
First Aid	25
Submersion	26
Roadside Assistance	27

About the AVALON Hybrid

The AVALON Hybrid 4-door sedan joins the hybrid model lineup for Toyota. Hybrid Synergy Drive means that the vehicle contains a gasoline engine and an electric motor for power. The two hybrid power sources are stored on board the vehicle:

1. Gasoline stored in the fuel tank for the gasoline engine.
2. Electricity stored in a high voltage Hybrid Vehicle (HV) battery pack for the electric motor.

The result of combining these two power sources is improved fuel economy and reduced emissions. The gasoline engine also powers an electric generator to recharge the battery pack; unlike a pure all electric vehicle, the AVALON Hybrid never needs to be recharged from an external electric power source.

Depending on the driving conditions one or both sources are used to power the vehicle. The following illustration demonstrates how the AVALON Hybrid operates in various driving modes.

❶ During light acceleration at low speeds, the vehicle is powered by the electric motor. The gasoline engine is shut off.

❷ During normal driving, the vehicle is powered mainly by the gasoline engine. The gasoline engine also powers the generator to recharge the battery pack and to drive the motor.

❸ During full acceleration, such as climbing a hill, both the gasoline engine and the electric motor power the vehicle.

❹ During deceleration, such as when braking, the vehicle regenerates kinetic energy from the front wheels to produce electricity that recharges the battery pack.

❺ While the vehicle is stopped, the gasoline engine and electric motor are off, however the vehicle remains on and operational.

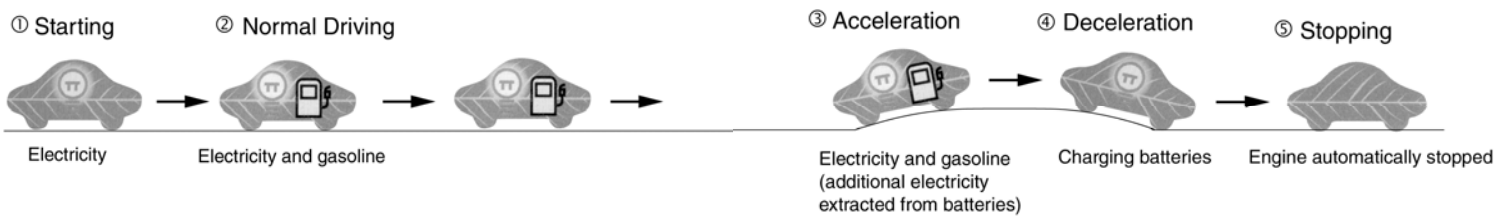

AVALON Hybrid Identification

In appearance, the 2013 model year AVALON Hybrid is nearly identical to the conventional, non-hybrid Toyota AVALON. The AVALON Hybrid is a 4-door sedan. Exterior, interior, and engine compartment illustrations are provided to assist in identification.

The alphanumeric 17 character Vehicle Identification Number (VIN) is provided in the front windshield cowl and on the driver side B pillar.

Example VIN: 4T1BD1EB0E2000101

An AVALON Hybrid is identified by the first 8 alphanumeric characters **4T1BD1EB**.

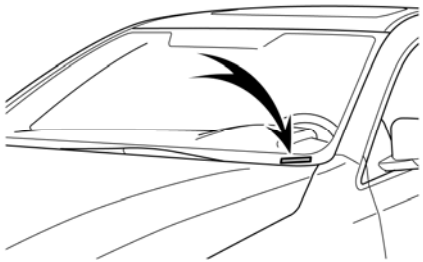

Driver Side Windshield Cowl

Driver Side B Pillar

Exterior

❶ HYBRID SYNERGY DRIVE and AVALON logos on the trunk.

❷ HYBRID logo on the driver and front passenger door.

❸ Gasoline fuel filler door located on the driver side rear quarter panel.

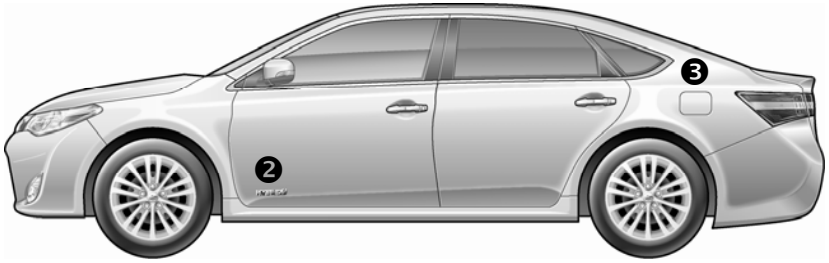

Exterior Driver Side View

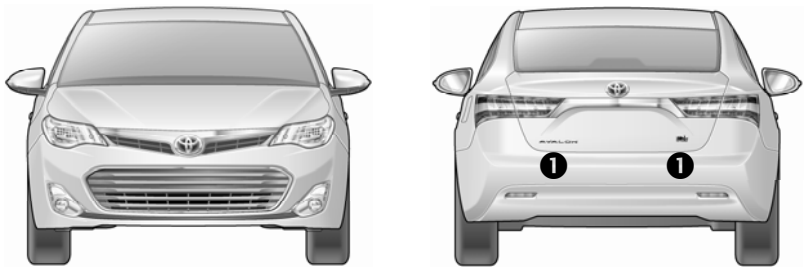

Exterior Front and Rear View

Exterior Rear and Driver Side View

AVALON Hybrid Identification (Continued)

Interior

❹ The instrument cluster (**READY** indicator, and warning lights) located in the dash behind the steering wheel, is different than the one on the conventional, non-hybrid AVALON.

❺ Instead of a tachometer, a hybrid system indicator is used.

NOTE:
If the vehicle is shut off, the instrument cluster gauges will be “blacked out”, not illuminated.

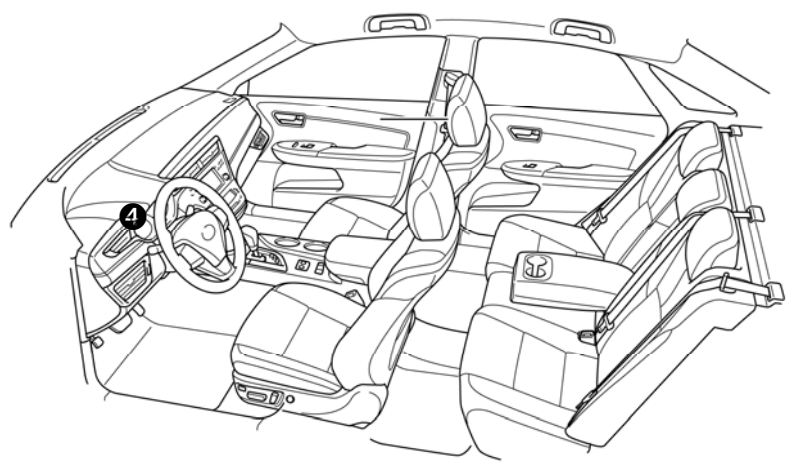

Interior View

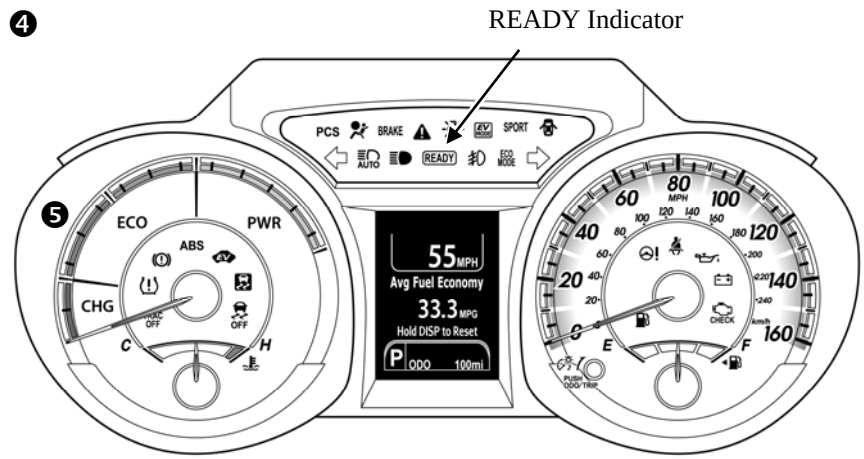

Instrument Cluster View

AVALON Hybrid Identification (Continued)

Engine Compartment

❻ 2.5-liter aluminum alloy gasoline engine.

❼ Logo on the plastic engine cover.

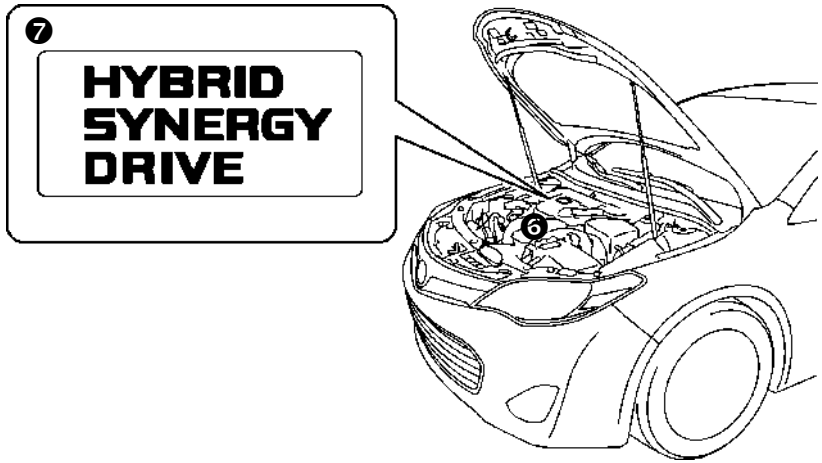

Engine Compartment View

Hybrid Synergy Drive Component Locations & Descriptions

Component	Location	Description
12 Volt Auxiliary Battery ❶	Passenger Side of Trunk	A lead-acid battery that supplies power to the low voltage devices.
Hybrid Vehicle (HV) Battery Pack ❷	Trunk Area, Mounted behind Rear Seat	244.8 Volt Nickel Metal Hydride (NiMH) battery pack consisting of 34 low voltage (7.2 Volt) modules connected in series.
Power Cables ❸	Undercarriage and Engine Compartment	Orange colored power cables carry high voltage Direct Current (DC) between the HV battery pack, inverter/converter, and A/C compressor. These cables also carry 3-phase Alternating Current (AC) between the inverter/converter, electric motor, and generator.
Inverter/ Converter ❹	Engine Compartment	Boosts and inverts the high voltage electricity from the HV battery pack to 3-phase AC electricity that drives the electric motor. The inverter/converter also converts AC electricity from the electric generator and electric motor (regenerative braking) to DC that recharges the HV battery pack.
DC-DC Converter for 12 Volt Auxiliary Battery ❺	Inverter/ Converter	Converts 244.8 Volts from the HV battery pack to 12 Volts for low voltage vehicle power.
Gasoline Engine ❻	Engine Compartment	Provides two functions: 1) Powers vehicle. 2) Powers generator to recharge the HV battery pack. The engine is started and stopped under control of the vehicle computer.
Electric Motor ❼	Engine Compartment	3-phase high voltage AC motor contained in the transaxle. It is used to power the front wheels.

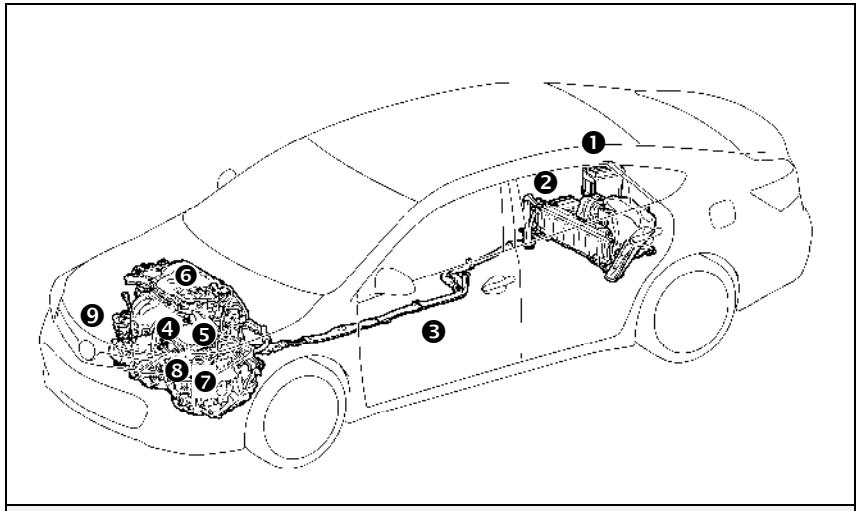

Hybrid Synergy Drive Components

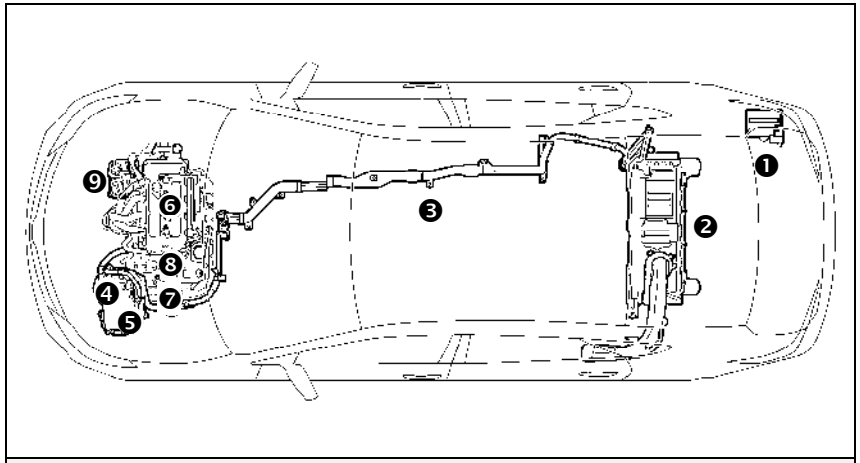

Components (Top View) and High Voltage Power Cables

Hybrid Synergy Drive Component Locations & Descriptions (Continued)

Component	Location	Description
Electric Generator ❽	Engine Compartment	3-phase high voltage AC generator that is contained in the transaxle and recharges the HV battery pack.
A/C Compressor (with Inverter) ❾	Engine Compartment	3-phase high voltage AC electrically driven motor compressor.
Fuel Tank and Fuel Line ❿	Undercarriage and Driver Side and Center	The fuel tank provides gasoline via a fuel line to the engine. The fuel line is routed along the driver side and center tunnel under the floor pan.

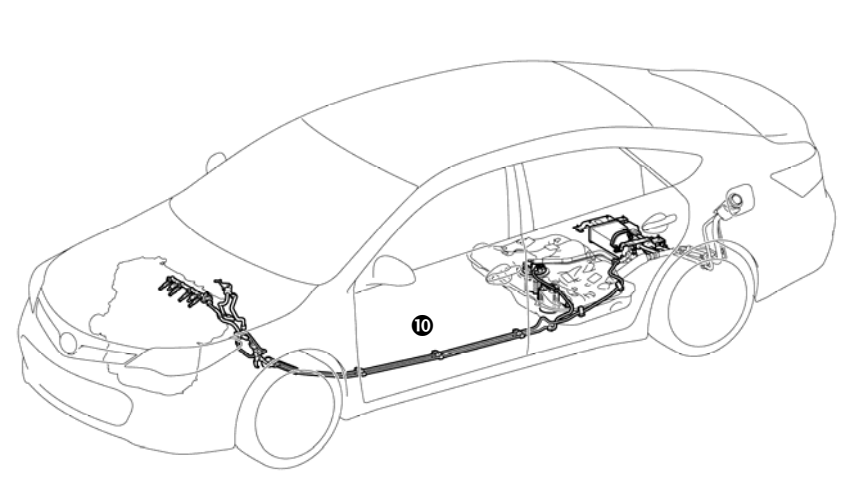

Fuel Tank and Fuel Line

Hybrid Synergy Drive Component Locations & Descriptions (Continued)

Key Specifications:

Gasoline Engine:	156 hp (116 kW), 2.5-liter Aluminum Alloy Engine
Electric Motor:	141 hp (105 kW), Permanent Magnet Motor
Transmission:	Automatic Only
HV Battery:	244.8 Volt Sealed NiMH-Battery
Curb Weight:	3,594 - 3,638 lbs/1,630 - 1,650 kg
Fuel Tank:	17 gals/64 liters
Frame Material:	Steel Unibody
Body Material:	Steel Panels
Seating Capacity:	5 passenger

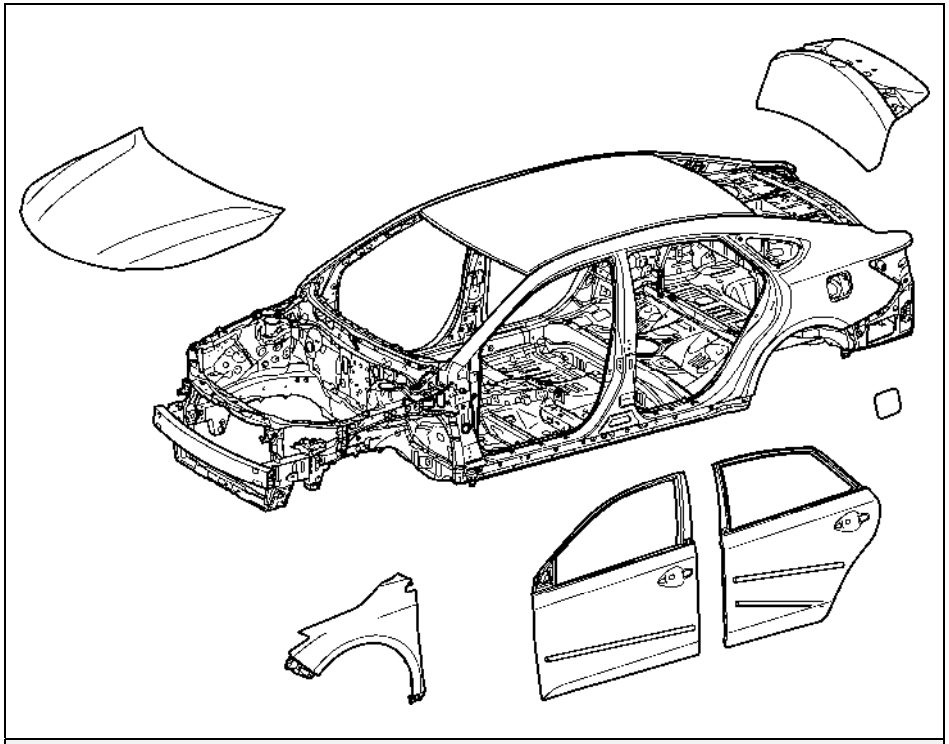

Steel Unibody

Smart Key System

The AVALON Hybrid smart key system consists of a smart key transceiver that communicates bi-directionally, enabling the vehicle to recognize the smart key in proximity to the vehicle. Once recognized, the smart key will allow the user to lock and unlock the doors without pushing smart key buttons, and start the vehicle without inserting it into an ignition switch.

Smart key features:

- Passive (remote) function to lock/unlock the doors, unlock the trunk, and start the vehicle.
- Wireless transmitter buttons to lock/unlock all 4 doors and unlock the trunk.
- Hidden metal cut key to lock/unlock the doors and glove box.

Door (Lock/Unlock)

There are several methods available to lock/unlock the doors.

- Pushing the smart key lock button will lock all doors.
  Pushing the smart key unlock button once unlocks the driver door, twice unlocks all doors.

- If the touch sensor is provided on both the driver and front passenger door exterior handles, touching the sensor on the backside of the driver door exterior handle, with the smart key in close proximity to the vehicle, unlocks the driver door. Touching the sensor on the backside of the front passenger door exterior handle, with the smart key in close proximity to the vehicle, unlocks all the doors.

- If the touch sensor is provided on the driver door exterior handle only, touching the unlock touch sensor on the backside of the driver door exterior handle, with the smart key in close proximity to the vehicle, unlocks the driver door. Touching the lock touch sensor on the front side of the driver door exterior handle locks all the doors.

- Inserting the hidden metal cut key in the driver door lock and turning clockwise once unlocks the driver door, twice unlocks all doors. To lock all doors turn the key counterclockwise once. Only the driver door contains an exterior door lock for the metal cut key.

Trunk (Unlock)

There are several methods available to open the trunk.

- Pushing the smart key trunk opener button.
- Pushing the trunk opener switch on the lower dash panel.
- Pushing the trunk opener switch with the smart key in proximity to the vehicle.

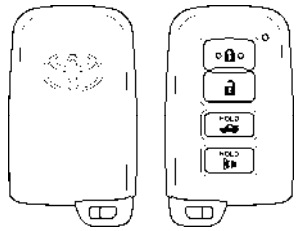	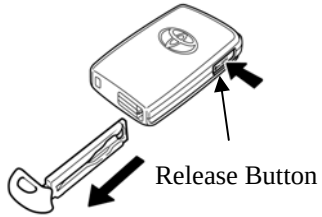
Smart Key (Fob)	Hidden Metal Cut Key for Door Lock
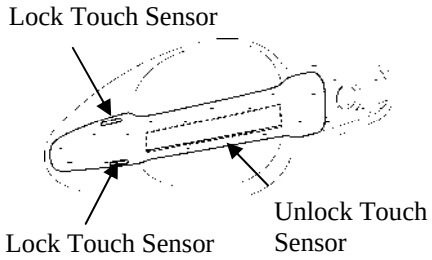	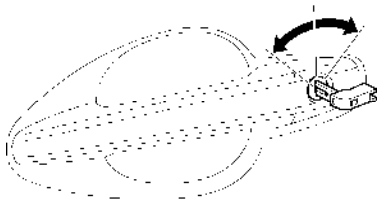 Use the Hidden Metal Cut Key
Driver Door Unlock Touch Sensor and Lock Touch Sensor	Front Driver Door Lock
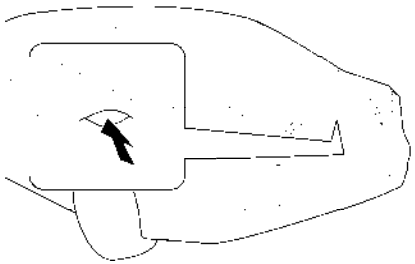	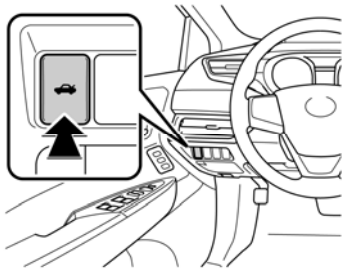
Trunk Opener Switch (Trunk)	Trunk Opener Switch (Lower Dash Panel)

Smart Key System (Continued)

Vehicle Starting/Stopping

The smart key uses a power button to start and stop the vehicle. The smart key only needs to be in proximity to the vehicle to allow the system to function.

- With the brake pedal released, the first push of the power button operates the accessory mode, the second push operates the ignition-on mode, and the third push turns the ignition off again.

Ignition Mode Sequence (brake pedal released):

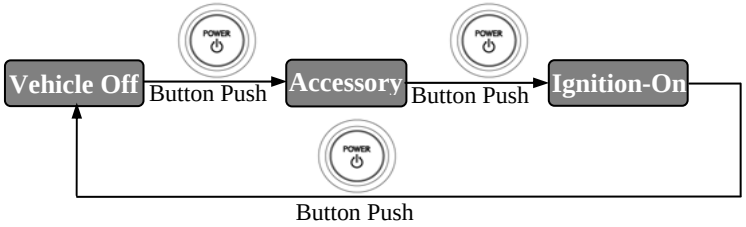

- Starting the vehicle takes priority over all other ignition modes and is accomplished by depressing the brake pedal and pushing the power button once. To verify the vehicle has started, check that the **READY** indicator is illuminated in the instrument cluster.

- If the internal smart key battery is dead, use the following method to start the vehicle.
  1. Touch the Toyota emblem side of the smart key to the power button.
  2. Within the 10 seconds after the buzzer sounds, push the power button with the brake pedal depressed (the **READY** indicator will illuminate).

- Once the vehicle has started and is on and operational (**READY-ON**), the vehicle is shut off by bringing the vehicle to a complete stop, placing the gearshift lever in **P**ark and then depressing the power button once.

- To shut off the vehicle before coming to a stop in an emergency, push and hold down the power button for more than 2 seconds or push the power button 3 times or more in a row. This procedure may be useful at an accident scene in which the **READY** indicator is on, **P**ark cannot be selected, and the drive wheels remain in motion.

Ignition Mode	Multi-information Display (Instrument Cluster)
Off	-
Accessory	POWER ON
Ignition-On	POWER ON
Brake Pedal Depressed	Smart Key Symbol
Vehicle Started (READY-ON)	-
Malfunction	Warning Message

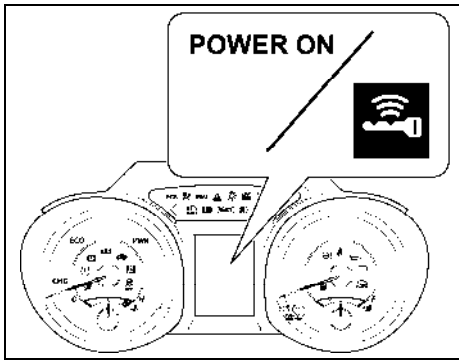

POWER ON & Smart Key Symbol (Multi-information Display)

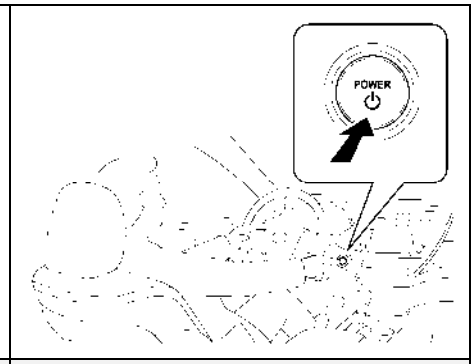

Ignition Modes (Brake Pedal Released)

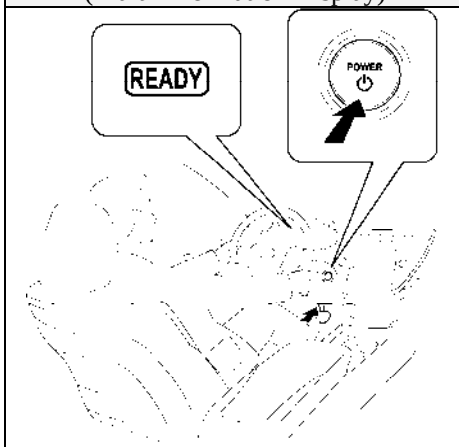

Starting Sequence (Brake Pedal Depressed)

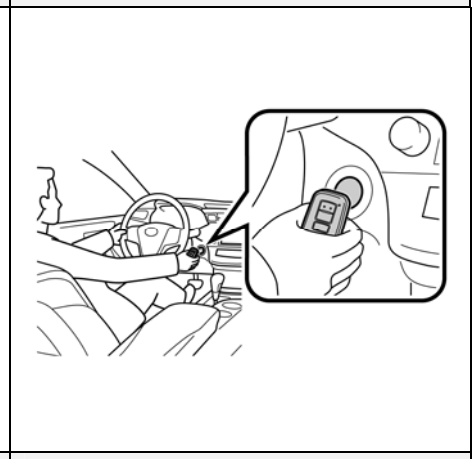

Smart Key Recognition (When Smart Key Battery is Dead)

Hybrid Synergy Drive Operation

Once the **READY** indicator is illuminated in the instrument cluster, the vehicle may be driven. However, the gasoline engine does not idle like a typical automobile and will start and stop automatically. It is important to recognize and understand the **READY** indicator provided in the instrument cluster. When lit, it informs the driver that the vehicle is on and operational even though the gasoline engine may be off and the engine compartment is silent.

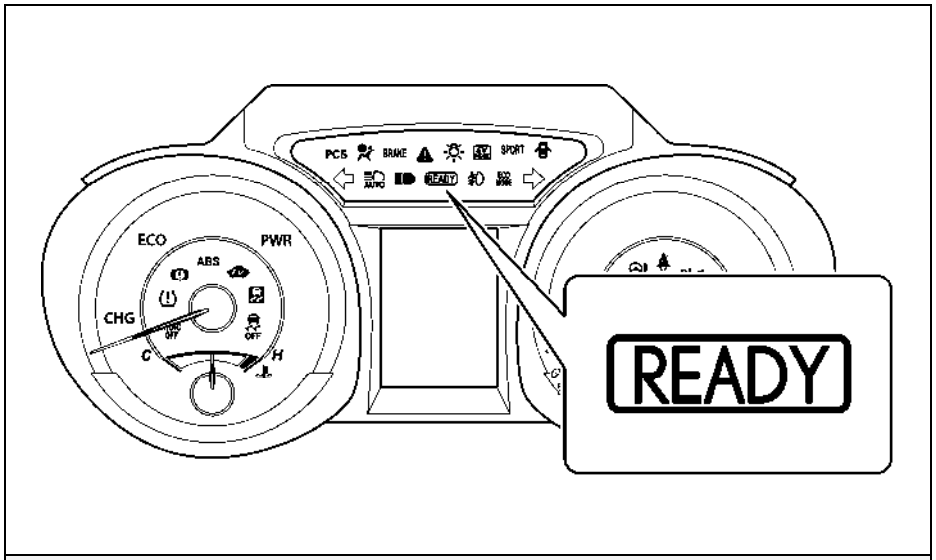

Instrument Cluster **READY** Indicator

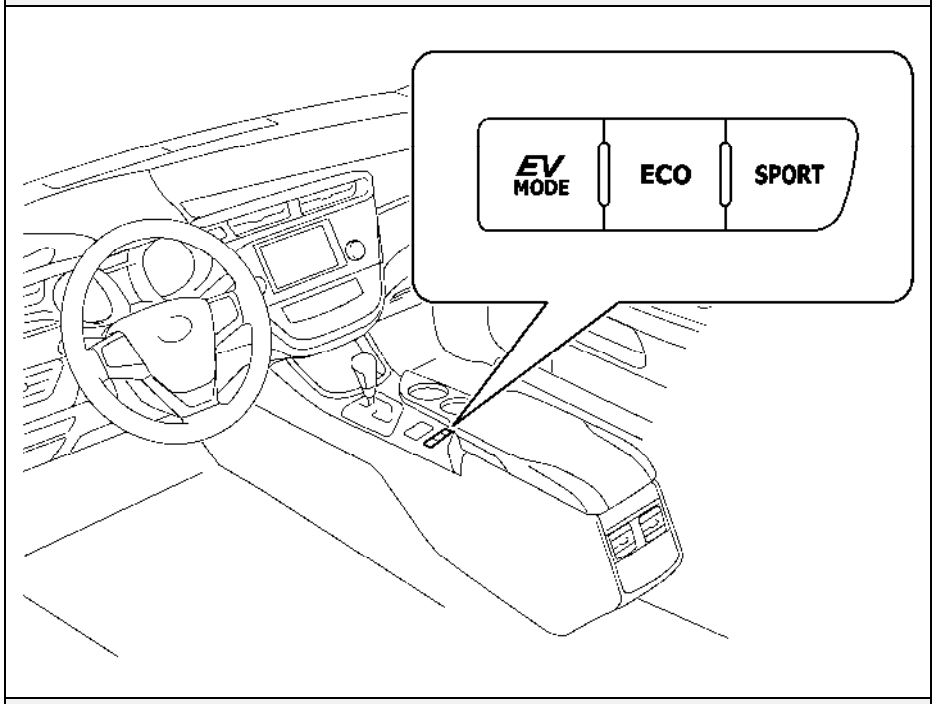

EV Mode Switch, ECO Switch and Sport Switch

Vehicle Operation

- With the AVALON Hybrid, the gasoline engine may stop and start at any time while the **READY** indicator is on.

- Never assume that the vehicle is shut off just because the engine is off. Always look for the **READY** indicator status. The vehicle is shut off when the **READY** indicator is off.

- The vehicle may be powered by:
    1. The electric motor only.
    2. A combination of both the electric motor and the gasoline engine.

- The vehicle computer determines the mode in which the vehicle operates in order to help enhance fuel economy and reduce emissions. Three features on the 2013 AVALON Hybrid are EV (Electric Vehicle) mode, ECO (Economy) mode and Sport mode:
    1. EV Mode: When activated, and certain conditions have been met, the vehicle operates with the electric motor powered by the HV battery.
    2. ECO Mode: When activated, ECO mode helps enhance fuel economy on trips that involve frequent braking and acceleration.
    3. Sport Mode: When activated, Sport mode optimizes acceleration feel by increasing the power output more quickly at the beginning of accelerator pedal operation.

Hybrid Synergy Drive Operation (Continued)

Vehicle Proximity Notification System

The AVALON Hybrid has a vehicle proximity notification system that emits a sound when the vehicle is driven using only the electric motor at speeds less than 12 mph. The sound is intended to notify pedestrians that the vehicle is approaching.

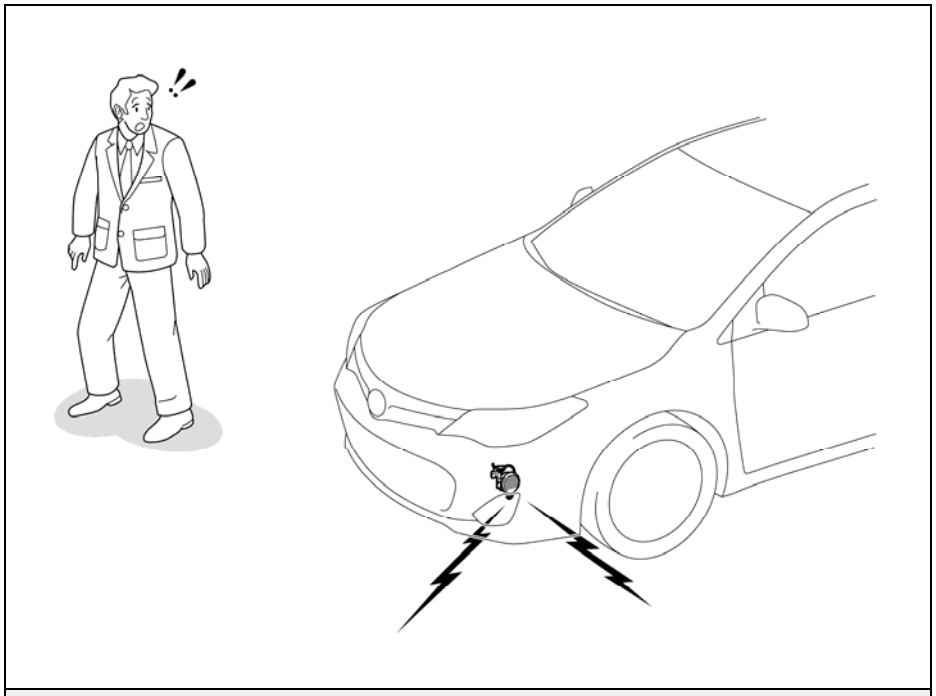

Vehicle Proximity Notification System

Hybrid Vehicle (HV) Battery Pack

The AVALON Hybrid features a high voltage Hybrid Vehicle (HV) battery pack that contains sealed Nickel Metal Hydride (NiMH) battery modules.

HV Battery Pack

- The HV battery pack is enclosed in a metal case and is rigidly mounted to the trunk area behind the rear seat. The metal case is isolated from high voltage and concealed by fabric covers in the trunk.
- The HV battery pack consists of 34 low voltage (7.2 Volt) NiMH battery modules connected in series to produce approximately 244.8 Volts. Each NiMH battery module is non-spillable and sealed in a metal case.
- The electrolyte used in the NiMH battery module is an alkaline mixture of potassium and sodium hydroxide. The electrolyte is absorbed into the battery cell plates and will not normally leak, even in a collision.

HV Battery Pack	
Battery pack voltage	244.8 V
Number of NiMH battery modules in the pack	34
NiMH battery module voltage	7.2 V
NiMH battery module dimensions (Width x Length x Height)	10.9 x 0.8 x 4.2 in (276 x 19.6 x 106 mm)
NiMH module weight	2.2 lbs (1 kg)
NiMH battery pack dimensions (Width x Length x Height)	32.1 x 17.5 x 12.9 in (817 x 445 x 325 mm)
NiMH battery pack weight	102.5 lbs (46.5 kg)

Note: Values in inches have been rounded

Components Powered by the HV Battery Pack

- Electric Motor
- Electric Generator
- Inverter/Converter
  - DC-DC Converter for 12 Volt Auxiliary Battery
- Power Cables
- A/C Compressor

HV Battery Pack Recycling

- The HV battery pack is recyclable. Contact the nearest Toyota dealer or:

  United States: (800) 331-4331
  Canada: (888) TOYOTA 8 [(888) 869-6828]

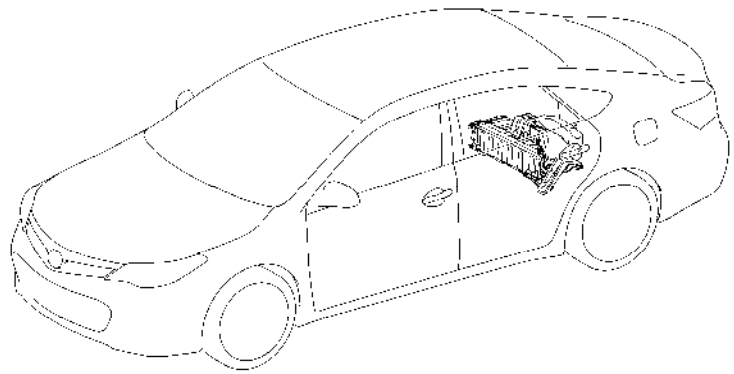

HV Battery Pack

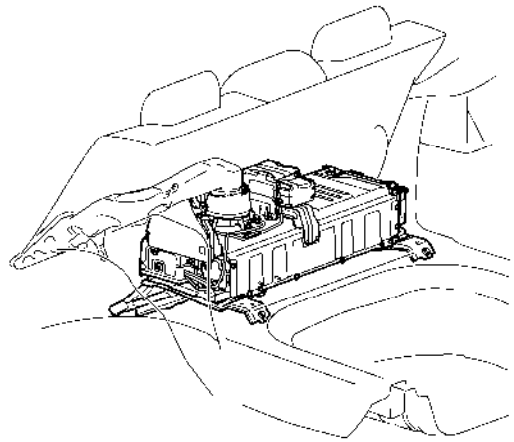

HV Battery Pack (Viewed From The Trunk)

Low Voltage Battery

Auxiliary Battery

- The AVALON Hybrid contains a sealed lead-acid 12 Volt battery. This 12 Volt auxiliary battery powers the vehicle electrical system similar to a conventional vehicle. As with other conventional vehicles, the negative terminal of the auxiliary battery is grounded to the metal chassis of the vehicle.

- The auxiliary battery is located in the trunk. It is concealed by a plastic resin cover on the passenger side in the rear quarter panel well.

  NOTE:
  An under hood label shows the location of the HV battery (traction battery) and 12 Volt auxiliary battery.

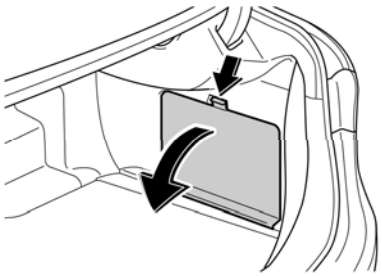

Remove Luggage Compartment Side Trim Cover

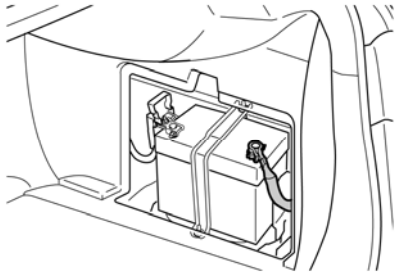

12 Volt Auxiliary Battery Mounted in the Trunk (Passenger Side)

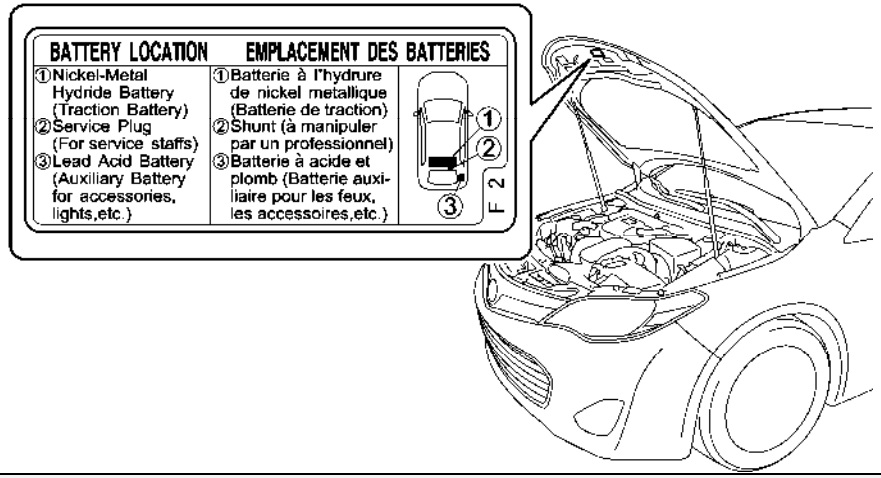

Battery Location Label

High Voltage Safety

The HV battery pack powers the high voltage electrical system with DC electricity. Positive and negative orange colored high voltage power cables are routed from the battery pack, under the vehicle floor pan, to the inverter/converter. The inverter/converter contains a circuit that boosts the HV battery voltage from 244.8 to 650 Volts DC. The inverter/converter creates 3-phase AC to power the motor. Power cables are routed from the inverter/converter to each high voltage motor (electric motor, electric generator, and A/C compressor). The following systems are intended to help keep occupants in the vehicle and emergency responders safe from high voltage electricity:

High Voltage Safety System

- A high voltage fuse ❶ provides short circuit protection in the HV battery pack.

- Positive and negative high voltage power cables ❷ connected to the HV battery pack are controlled by 12 Volt normally open relays ❸. When the vehicle is shut off, the relays stop electrical flow from leaving the HV battery pack.

> ⚠**WARNING:**
> *The high voltage system may remain powered for up to 10 minutes after the vehicle is shut off or disabled. To prevent serious injury or death from severe burns or electric shock, avoid touching, cutting, or breaching any orange high voltage power cable or high voltage component.*

- Both positive and negative power cables ❷ are insulated from the metal body. High voltage electricity flows through these cables and not through the metal vehicle body. The metal vehicle body is safe to touch because it is insulated from the high voltage components.

- A ground fault monitor in the hybrid vehicle computer ❹ continuously monitors for high voltage leakage to the metal chassis while the vehicle is running. If a malfunction is detected, the hybrid vehicle computer ❹ will illuminate the master warning light ⚠ in the instrument cluster and indicate "Check Hybrid System" on the multi-information display.

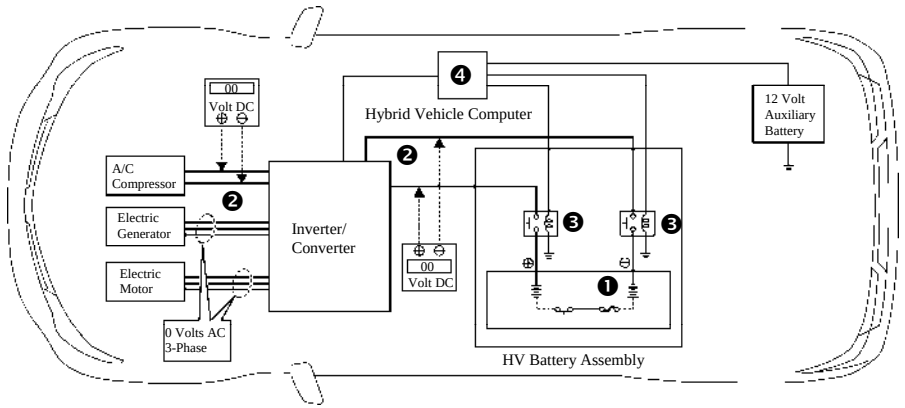

High Voltage Safety System – Vehicle Shut Off (**READY-OFF**)

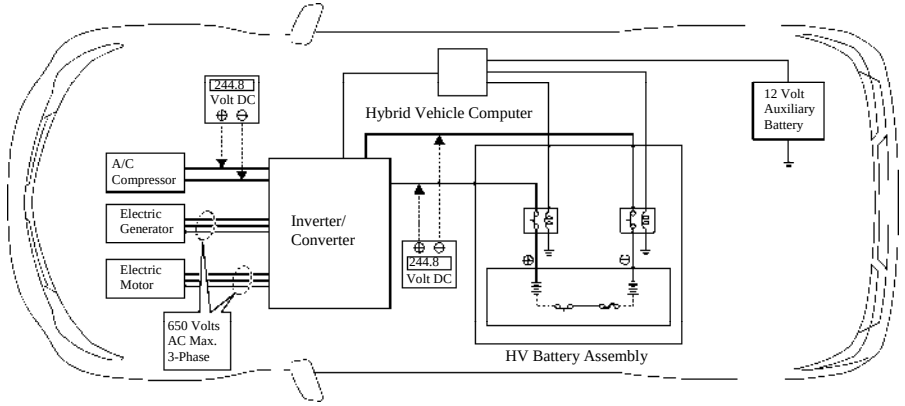

High Voltage Safety System – Vehicle On and Operational (**READY-ON**)

SRS Airbags & Seat Belt Pretensioners

Standard Equipment

- Electronic frontal impact sensors (2) are mounted in the engine compartment ❶ as illustrated.
- Front seat belt pretensioners are mounted near the base of the B-pillars ❷.
- A frontal dual stage driver airbag ❸ is mounted in the steering wheel hub.
- A frontal dual stage passenger airbag ❹ is integrated into the dashboard and deploys through the top of the dashboard.
- The SRS computer ❺, which contains an impact sensor, is mounted on the floor pan underneath the instrument panel, forward of the shift lever.
- Front door electric side impact sensors (2) are mounted inside the base of the front doors ❻.
- Front electronic side impact sensors (2) are mounted near the base of the B-pillars. ❼
- Rear electronic side impact sensors (2) are mounted near the base of the C-pillars. ❽
- Front seat side airbags ❾ are mounted in the front seatbacks.
- Rear seat side airbags ❿are mounted in the rear seatbacks.
- Side curtain airbags ⓫ are mounted along the outer edge inside the roof rails.
- Front knee airbags (2) ⓬ are mounted on the lower portion of the dash.

Optional Equipment

- The optional pre-collision system contains a radar sensory system and an electric motor-pyrotechnic pretensioner system. During a pre-collision event, an electric motor in the pretensioners retracts the front seatbelts. When conditions stabilize the electric motor will reverse itself. When the airbags deploy, or as necessary, the pyrotechnic pretensioners function normally.

⚠ **WARNING:**
The SRS may remain powered for up to 90 seconds after the vehicle is shut off or disabled. To prevent serious injury or death from unintentional SRS deployment, avoid breaching the SRS components.

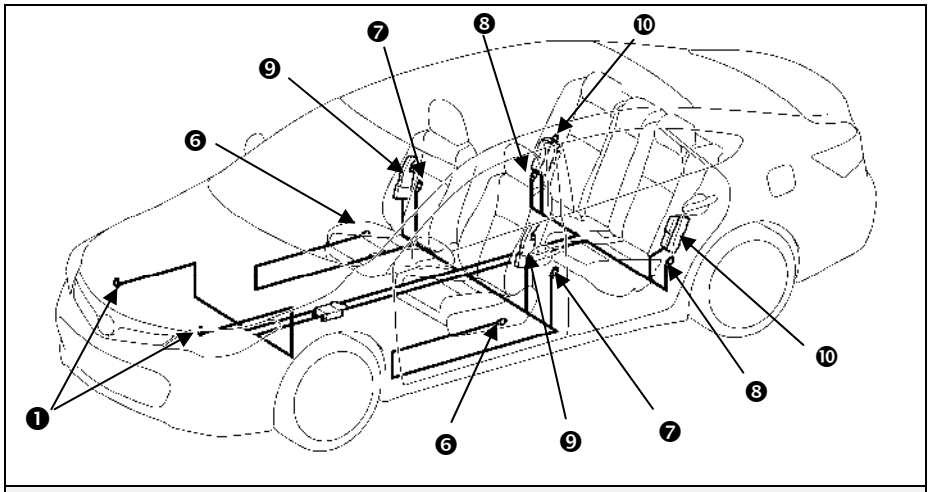

Electronic Impact Sensors and Side Airbags

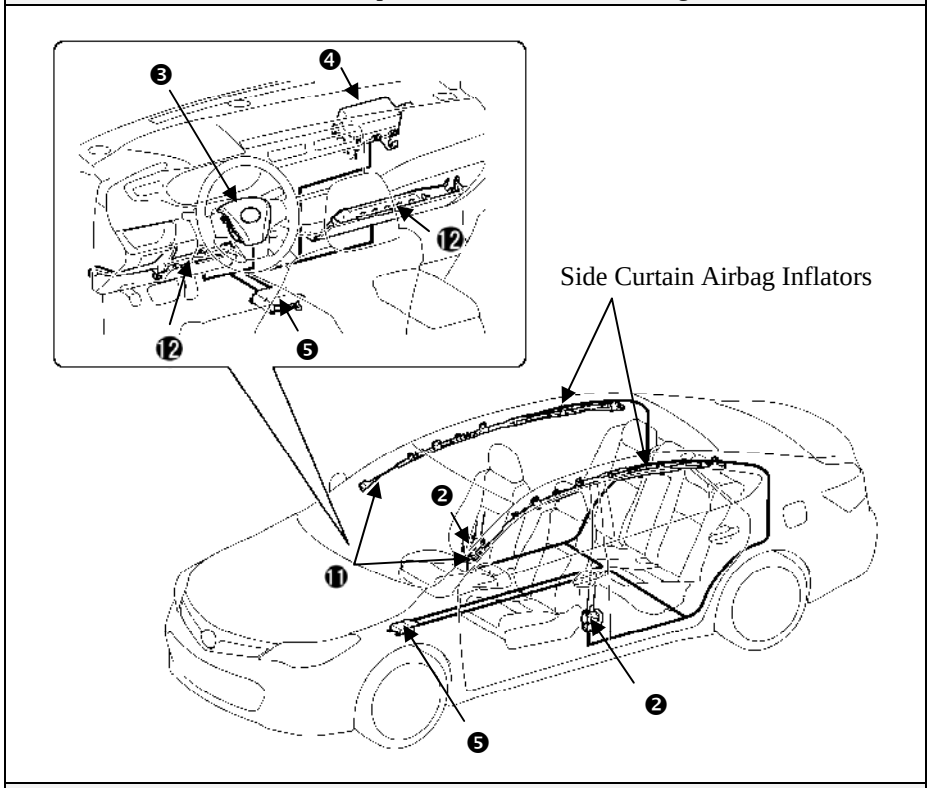

Standard Frontal Airbags, Seat Belt Pretensioners, Knee Airbags, Side Curtain Airbags

SRS Airbags & Seat Belt Pretensioners (Continued)

Standard Equipment (Continued)

NOTE:
The front seatback mounted side airbags and the side curtain airbags may deploy independently of each other.

The knee airbags deploy simultaneously with the frontal airbags and seat belt pretensioners.

The AVALON Hybrid is equipped with a standard front passenger occupant classification system that may prohibit the deployment of the front passenger frontal airbag, knee airbag, and seat belt pretensioner. If the front passenger occupant classification system prohibits deployment during an SRS event, the front passenger SRS will not re-arm nor deploy.

Electronic side impact sensors are installed in each front door to aid in side collision detection accuracy.

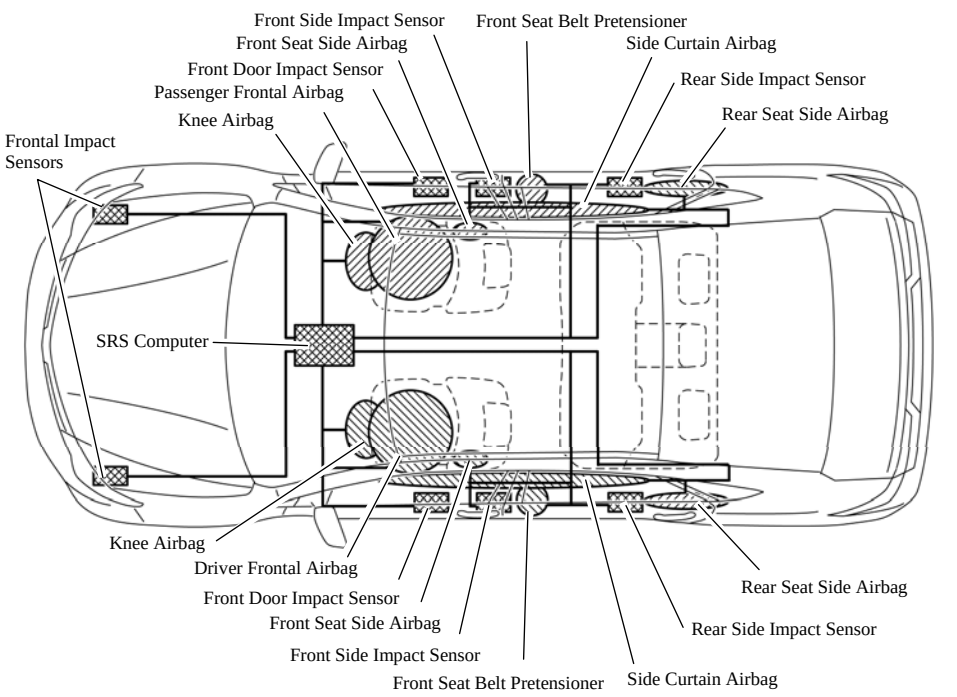

SRS System Diagram

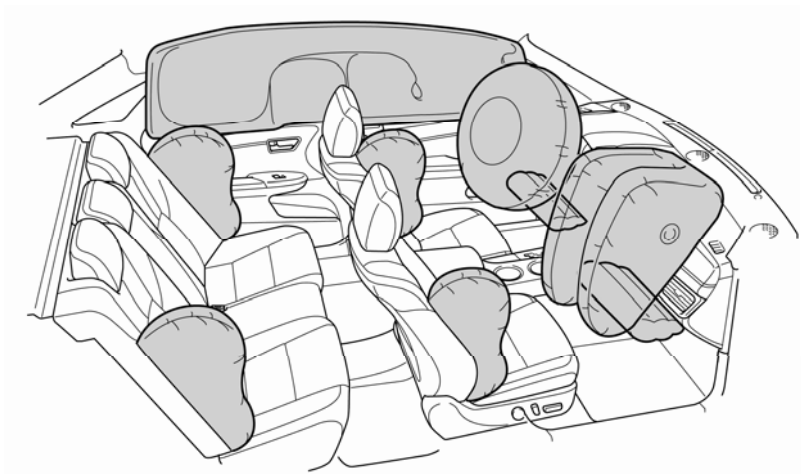

Frontal, Knee, Front and Rear Seatback Mounted Side, Side Curtain Airbags

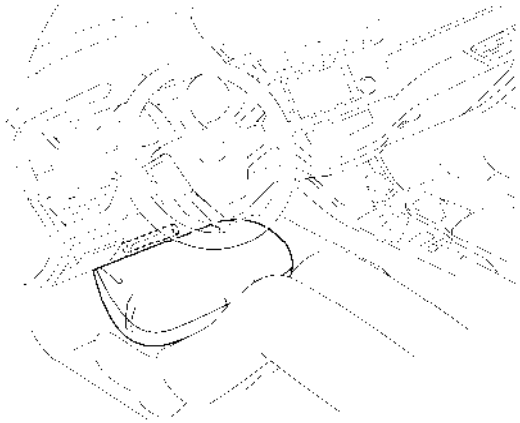

Driver Knee Airbag and Inflator

Emergency Response

On arrival, emergency responders should follow their standard operating procedures for vehicle incidents. Emergencies involving the AVALON Hybrid may be handled like other automobiles except as noted in these guidelines for Extrication, Fire, Overhaul, Recovery, Spills, First Aid, and Submersion.

⚠ WARNING:

- ***Never*** *assume the AVALON Hybrid is shut off simply because it is silent.*
- *Always observe the instrument cluster for the* ***READY*** *indicator status to verify whether the vehicle is on or shut off. The vehicle is shut off when the* ***READY*** *indicator is off.*
- *Failure to shut off the vehicle before emergency response procedures are performed may result in serious injury or death from the unintentional deployment of the SRS or severe burns and electric shock from the high voltage electrical system.*

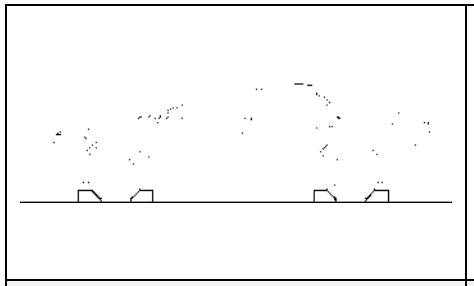

Chock Wheels

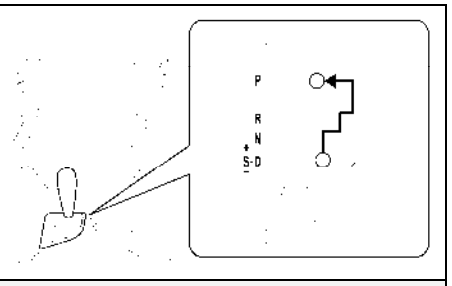

Shift Lever in Park

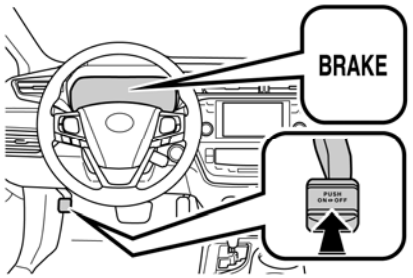

Set Parking Brake

Extrication

- Immobilize Vehicle

  Chock wheels and set the parking brake.
  Move the shift lever to the **P**ark position.

- Disable Vehicle

  Performing either of the following two procedures will shut the vehicle off and disable the HV battery pack, SRS, and gasoline fuel pump.

Emergency Response (Continued)

Extrication (Continued)

Procedure #1

1. Confirm the status of the **READY** indicator in the instrument cluster.
2. If the **READY** indicator is illuminated, the vehicle is on and operational. Shut off the vehicle by pushing the power button once.
3. The vehicle is already shut off if the instrument cluster lights and the **READY** indicator are not illuminated. Do **not** push the power button because the vehicle may start.
4. If the smart key is easily accessible, keep it at least 16 feet (5 meters) away from the vehicle.
5. If the smart key cannot be found, disconnect the 12 Volt auxiliary battery in the trunk to prevent accidental restarting of the vehicle.

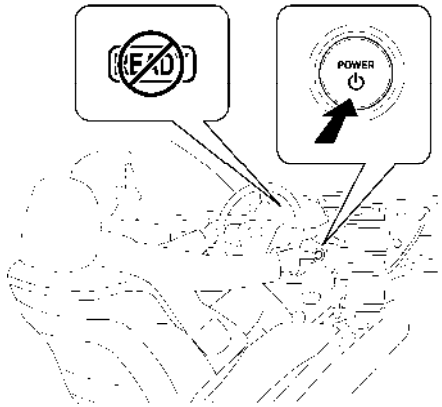

Shut Off Vehicle (**READY-OFF**)

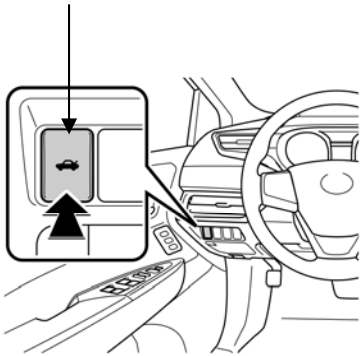

Electric Trunk Opener Switch

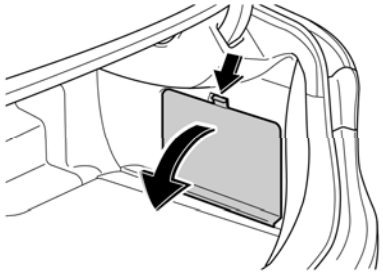

Remove Luggage Compartment Side Trim Cover

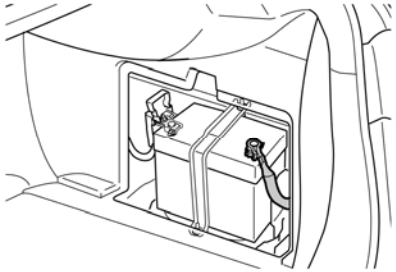

12 Volt Auxiliary Battery Mounted in the Trunk (Passenger Side)

Emergency Response (Continued)

Extrication (Continued)

Procedure #2 (Alternate if power button is inaccessible)

1. Open the hood.
2. Remove the fuse box cover.
3. Remove the **IG2-MAIN** fuse (25 A clear colored) in the engine compartment fuse box (refer to illustration). If the correct fuse cannot be recognized, pull all fuses in the fuse box.
4. Disconnect the 12 Volt auxiliary battery under the cover in the trunk.

NOTE:
Before disconnecting the 12 Volt auxiliary battery, if necessary, reposition the power seats, lower the windows, unlock the doors, and open the trunk as required. The electric lock of the fuel filler door is linked with the door lock. A manual fuel filler door release is located inside the driver side trunk (refer to illustrations in the Roadside Assistance section on page 28). Once the 12 Volt auxiliary battery is disconnected, power controls will not operate.

⚠ WARNING:

- *The high voltage system may remain powered for up to 10 minutes after the vehicle is shut off or disabled. To prevent serious injury or death from severe burns or electric shock, avoid touching, cutting, or breaching any orange high voltage power cable or high voltage component.*
- *The SRS may remain powered for up to 90 seconds after the vehicle is shut off or disabled. To prevent serious injury or death from unintentional SRS deployment, avoid breaching the SRS components.*
- *If none of the disabling procedures can be performed, proceed with caution as there is no assurance that the high voltage electrical system, SRS, or fuel pump are disabled.*

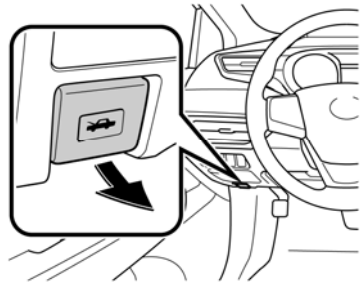

Pull Hood Lock Release

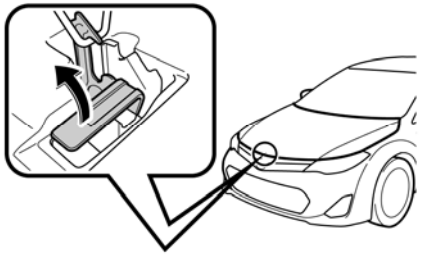

Hood Latch Release

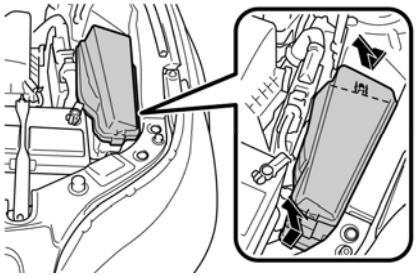

Remove Fuse Box Cover

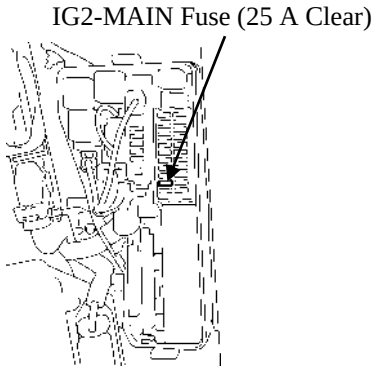

Location of IG2-MAIN Fuses in Engine Compartment Fuse Box

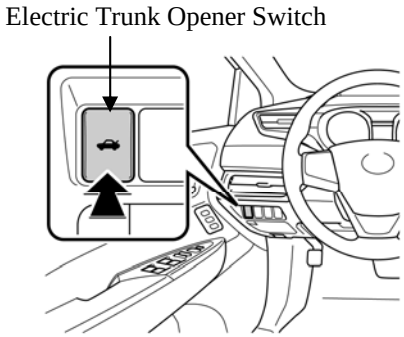

Electric Trunk Opener Switch

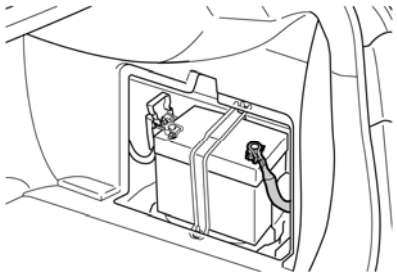

12 Volt Auxiliary Battery Mounted in the Trunk (Passenger Side)

Emergency Response (Continued)

Extrication (Continued)

- Stabilize Vehicle

  Crib at (4) points directly under the front and rear pillars.
  Do not place cribbing under the high voltage power cables, exhaust system, or fuel system.

  NOTE:
  The AVALON Hybrid is equipped with a tire pressure warning system that by design prevents pulling the metal valve stem with integral transmitter from the wheel. Snapping the valve stem with pliers or removing the valve cap and valve core will release the air in the tire.

- Access Patients

  Glass Removal

  The AVALON Hybrid is equipped with laminated front side windows having similar properties as laminated windshield glass. If front side glass removal is required, use the same techniques as the front windshield glass.

  Types of glazing found on the AVALON Hybrid
  - Laminated front windshield
  - Laminated front side windows
  - Tempered rear side windows
  - Tempered rear window

  SRS Awareness

  Responders need to be cautious when working in close proximity to undeployed airbags and seat belt pretensioners. Frontal dual stage airbags automatically ignite both stages within a fraction of a second.

  Door Removal/Displacement

  Doors can be removed by conventional rescue tools such as hand, electric, and hydraulic tools. In certain situations, it may be easier to pry back the vehicle body to expose and unbolt the hinges.

NOTE:
To prevent accidental airbag deployment when performing front door removal/displacement, ensure the vehicle is shut off and the 12 Volt auxiliary battery is disconnected.

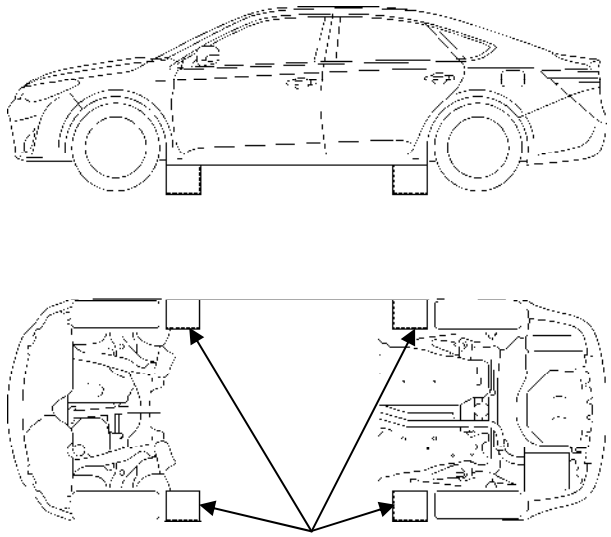

Cribbing Points

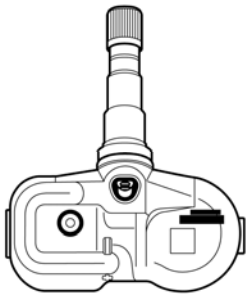

Metal Valve Stem with Integral Transmitter

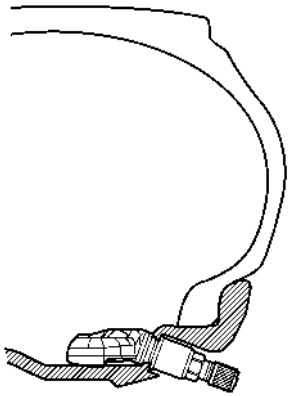

Metal Valve Stem with Integral Transmitter Installed on Wheel

Emergency Response (Continued)

Extrication (Continued)

Roof Removal

The AVALON Hybrid is equipped with side curtain airbags. When undeployed, total roof removal is not recommended. Patient access through the roof can be performed by cutting the roof center section inboard of the roof rails as illustrated. This would avoid breaching the side curtain airbags, inflators, and wiring harness.

NOTE:
The side curtain airbags may be identified as illustrated on this page (additional component details on page 15).

Dash Displacement

The AVALON Hybrid is equipped with side curtain airbags. When undeployed, total roof removal is not recommended to avoid breaching the side curtain airbags, inflators, and wiring harness. As an alternative, dash displacement may be performed by using a Modified Dash Roll.

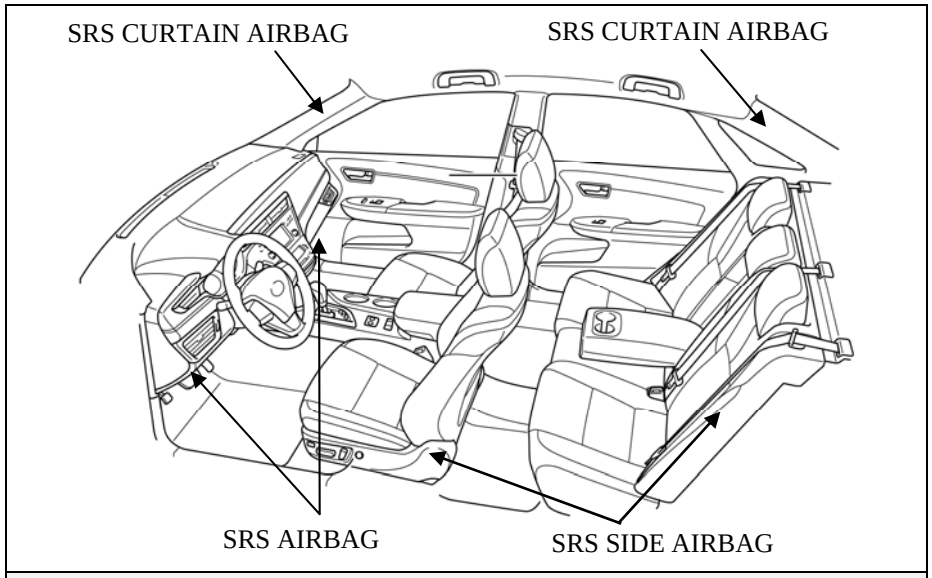

Side, Curtain, and Knee Airbag Identifiers

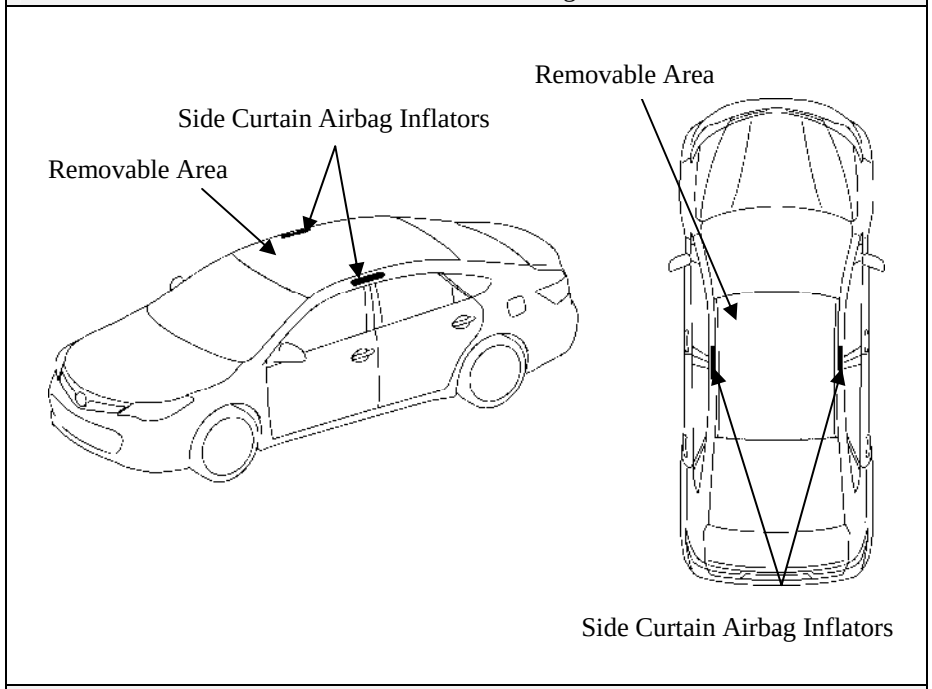

Roof Removal Area

Emergency Response (Continued)

Extrication (Continued)

Rescue Lift Air Bags

Responders should not place cribbing or rescue lift air bags under the high voltage power cables, exhaust system, or fuel system.

Repositioning Steering Wheel and Front Seats

Tilt and telescopic steering wheel and seat controls are shown in the illustrations.

NOTE:
The AVALON Hybrid has an optional electrochromic auto dimming rear view mirror. The mirror contains a minimal amount of transparent gel sealed between two glass plates that will not normally leak.

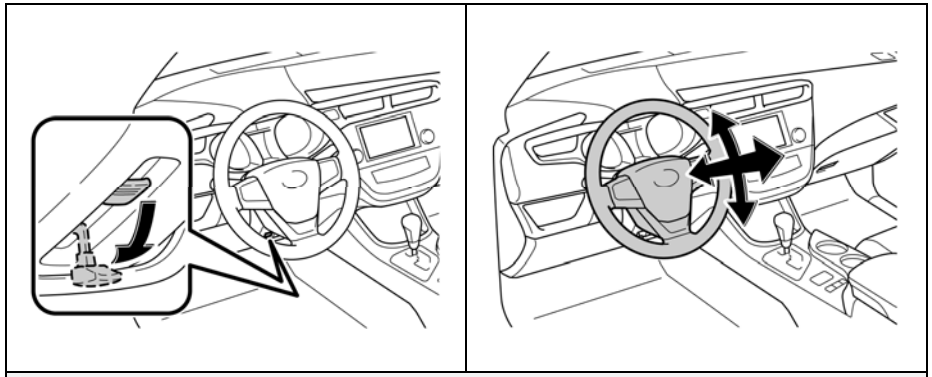

Tilt and Telescoping Control

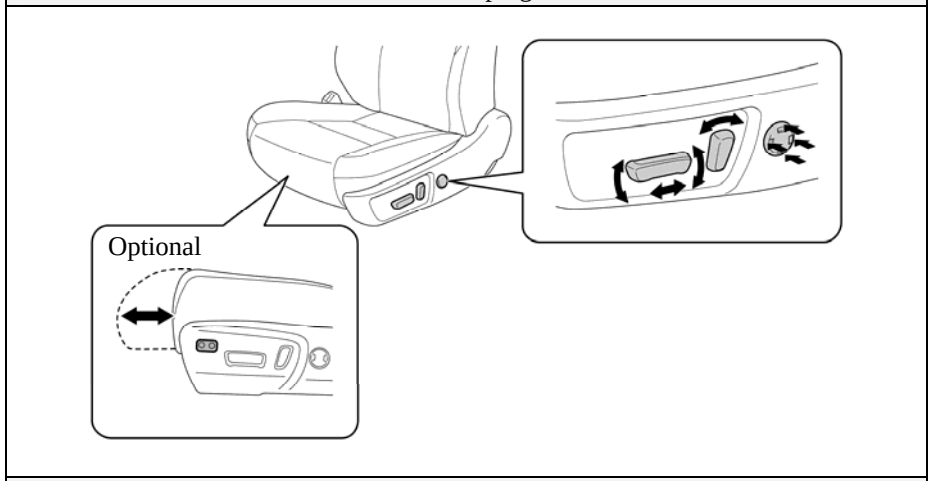

Front Power Seat Controls

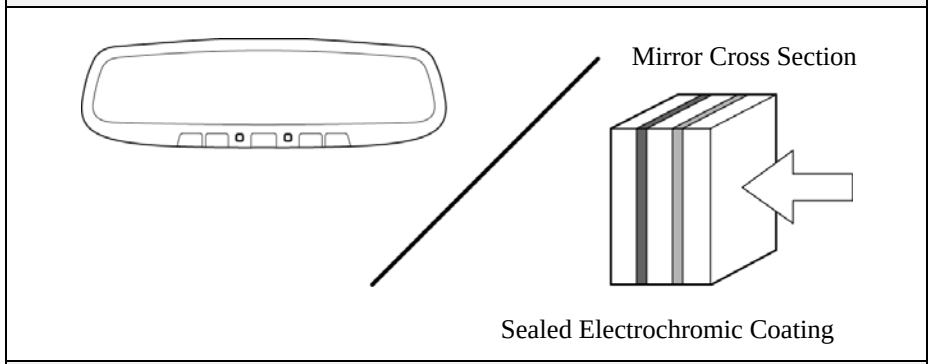

Optional Electrochromic Auto Dimming Rear View Mirror

Emergency Response (Continued)

Fire

Approach and extinguish a fire using proper vehicle fire fighting practices as recommended by NFPA, IFSTA, or the National Fire Academy (USA).

- Extinguishing Agent
  Water has been proven to be a suitable extinguishing agent.

- Initial Fire Attack
  Perform a fast, aggressive fire attack.
  Divert the runoff from entering watershed areas.
  Attack teams may not be able to identify an AVALON Hybrid until the fire has been knocked down and overhaul operations have commenced.

- Fire in the HV Battery Pack
  Should a fire occur in the NiMH HV battery pack, attack crews should utilize a water stream or fog pattern to extinguish any fire within the vehicle *except* for the HV battery pack.

⚠ **WARNING:**

- *The NiMH battery electrolyte is a caustic alkaline (pH 13.5) that is damaging to human tissues. To avoid injury by coming in contact with the electrolyte, wear proper personal protective equipment.*
- *The battery modules are contained within a metal case and accessibility is limited.*
- *To avoid serious injury or death from severe burns or electric shock,* ***never*** *breach or remove the high voltage battery pack cover under any circumstance including fire.*

When allowed to burn themselves out, the AVALON Hybrid NiMH battery modules burn rapidly and can quickly be reduced to ashes except for the metal.

Offensive Fire Attack

Normally, flooding a NiMH HV battery pack with copious amounts of water at a safe distance will effectively control the HV battery pack fire by cooling the adjacent NiMH battery modules to a point below their ignition temperature. The remaining modules on fire, if not extinguished by the water, will burn themselves out.

However, flooding the AVALON Hybrid HV battery pack is *not* recommended due to the battery case design and location preventing the responder from properly applying water through the available vent openings safely. Therefore, it is recommended that the incident commander allow the AVALON Hybrid HV battery pack to burn itself out.

Defensive Fire Attack

If the decision has been made to fight the fire using a defensive attack, the fire attack crew should pull back a safe distance and allow the NiMH battery modules to burn themselves out. During this defensive operation, fire crews may utilize a water stream or fog pattern to protect exposures or to control the path of smoke.

Emergency Response (Continued)

Overhaul

During overhaul, immobilize and disable the vehicle if not already done. Refer to illustrations on page 17, 18 and 19. The HV battery cover should ***never*** be breached or removed under any circumstances including fire. Doing so may result in severe electrical burns, shock, or electrocution.

- Immobilize Vehicle
  Chock wheels and set the parking brake.
  Move the shift lever to the **P**ark position.

- Disable Vehicle
  Performing either of the following two procedures will shut the vehicle off and disable the HV battery pack, SRS, and gasoline fuel pump.

  Procedure #1
  1. Confirm the status of the **READY** indicator in the instrument cluster.
  2. If the **READY** indicator is illuminated, the vehicle is on and operational. Shut off the vehicle by pushing the power button once.
  3. The vehicle is already shut off if the instrument cluster lights and the **READY** indicator are not illuminated. Do **not** push the power button because the vehicle may start.
  4. If the smart key is easily accessible, keep it at least 16 feet (5 meters) away from the vehicle.
  5. If the smart key cannot be found, disconnect the 12 Volt auxiliary battery in the trunk to prevent accidental restarting of the vehicle.

  Procedure #2 (Alternate if power button is inaccessible)
  1. Open the hood and remove the fuse box cover.
  2. Remove the **IG2-MAIN** fuse (25 A clear colored) in the engine compartment fuse box as illustrated on page 19. If the correct fuse cannot be recognized, pull all fuses in the fuse box.
  3. Disconnect the 12 Volt auxiliary battery in the trunk.

NOTE:
Before disconnecting the 12 Volt auxiliary battery, if necessary, reposition the power seats, lower the windows, unlock the doors, and open the trunk as required. The electric lock of the fuel filler door is linked with the door lock. A manual fuel filler door release is located inside the driver side trunk (refer to illustrations in the Roadside Assistance section on page 28). Once the 12 Volt auxiliary battery is disconnected, power controls will not operate.

⚠ **WARNING:**

- *The high voltage system may remain powered for up to 10 minutes after the vehicle is shut off or disabled. To prevent serious injury or death from severe burns or electric shock, avoid touching, cutting, or breaching any orange high voltage power cable or high voltage component.*
- *The SRS may remain powered for up to 90 seconds after the vehicle is shut off or disabled. To prevent serious injury or death from unintentional SRS deployment, avoid breaching the SRS components.*
- *If none of the disabling procedures can be performed, proceed with caution as there is no assurance that the high voltage electrical system, SRS, or fuel pump are disabled.*

Recovering/Recycling of NiMH HV Battery Pack

Clean up of the HV battery pack can be accomplished by the vehicle recovery crew without further concern of runoff or spillage. For information regarding recycling of the HV battery pack, contact the nearest Toyota dealer, or:

United States: (800) 331-4331
Canada: (888) TOYOTA 8 [(888) 869-6828]

Emergency Response (Continued)

Spills

The AVALON Hybrid contains the same common automotive fluids used in other non-hybrid Toyota vehicles, with the exception of the NiMH electrolyte used in the HV battery pack. The NiMH battery electrolyte is a caustic alkaline (pH 13.5) that is damaging to human tissues. The electrolyte, however, is absorbed in the cell plates and will not normally spill or leak out even if a battery module is cracked. A catastrophic crash that would breach both the metal battery pack case and a metal battery module would be a rare occurrence.

> ⚠ **WARNING:**
> *The NiMH battery electrolyte is a caustic alkaline (pH 13.5) that is damaging to human tissues. To avoid injury by coming in contact with the electrolyte, wear proper personal protective equipment.*

Similar to the use of baking soda to neutralize a lead-acid battery electrolyte spill, a dilute boric acid solution or vinegar can be used to neutralize a NiMH battery electrolyte spill.

NOTE:
Electrolyte leakage from the HV battery pack is unlikely due to its construction and the amount of available electrolyte contained within the NiMH modules. Any spillage would not warrant a declaration as a hazardous material incident. Responders should follow the recommendations as outlined in this emergency response guide.

In an emergency, the NiMH battery part number G9280-33030 manufacturer's Product Safety Data Sheet (PSDS) is available by contacting:

United States: CHEMTREC at (800) 424-9300
Canada: CANUTEC at *666 or (613) 996-6666 (collect)

- Handle NiMH electrolyte spills using the following Personal Protective Equipment (PPE):
  Splash shield or safety goggles. Fold down helmet shields are not acceptable for acid or electrolyte spills.
  Rubber, latex or nitrile gloves.
  Apron suitable for alkaline.
  Rubber boots.

- Neutralize NiMH Electrolyte
  Use a boric acid solution or vinegar.
  Boric acid solution - 800 grams boric acid to 20 liters water or 5.5 ounces boric acid to 1 gallon of water.

First Aid

Emergency responders may not be familiar with a NiMH electrolyte exposure when rendering aid to a patient. Exposure to the electrolyte is unlikely except in a catastrophic crash or through improper handling. Utilize the following guidelines in the event of exposure.

> ⚠ **WARNING:**
> *The NiMH battery electrolyte is a caustic alkaline (pH 13.5) that is damaging to human tissues. To avoid injury by coming in contact with the electrolyte, wear proper personal protective equipment.*

- Wear Personal Protective Equipment (PPE)
  Splash shield or safety goggles. Fold down helmet shields are not acceptable for acid or electrolyte spills.
  Rubber, latex or nitrile gloves.
  Apron suitable for alkaline.
  Rubber boots.

- Absorption
  Perform gross decontamination by removing affected clothing and properly disposing of the garments.
  Rinse the affected areas with water for 20 minutes.
  Transport patients to the nearest emergency medical care facility.

- Inhalation in Non-Fire Situations
  No toxic gases are emitted under normal conditions.

Emergency Response (Continued)

First Aid (Continued)

- Inhalation in Fire Situations

  Toxic gases are given off as by-products of combustion. All responders in the Hot Zone should wear the proper PPE for fire fighting including SCBA.

  Move a patient from the hazardous environment to a safe area and administer oxygen.

  Transport patients to the nearest emergency medical care facility.

- Ingestion

  Do not induce vomiting.

  Allow the patient to drink large quantities of water to dilute the electrolyte (never give water to an unconscious person).

  If vomiting occurs spontaneously, keep the patient's head lowered and forward to reduce the risk of aspiration.

  Transport patients to the nearest emergency medical care facility.

Submersion

A submerged hybrid vehicle does not have high voltage potential on the metal vehicle body, and is safe to touch.

Access Patients

Responders can access the patient and perform normal extrication procedures. High voltage orange color coded power cables and high voltage components should never be touched, cut, or breached.

Vehicle Recovery

If a hybrid vehicle is fully or partially submerged in water, emergency responders may not be able to determine if the vehicle has been automatically disabled. The AVALON Hybrid may be handled by following these recommendations:

1. Remove the vehicle from the water.
2. Drain the water from the vehicle if possible.
3. Follow the immobilizing and disabling procedures on page 17, 18 and 19.

Roadside Assistance

Roadside assistance for the Toyota AVALON Hybrid may be handled like conventional Toyota vehicles except as noted in the following pages.

Toyota Roadside Assistance is available during the basic warranty period by contacting:

United States: (800) 297-0486 (for the first 2 years/25,000 miles)
Canada: (888) TOYOTA 8 [(888) 869-6828] (for the first 3 years/60,000 km)

Shift Lever
Similar to many Toyota vehicles, the AVALON Hybrid uses a gated shift lever as shown in the illustration. However, the AVALON Hybrid shift lever includes an **S** position for 6 levels of engine braking.

Towing
The AVALON Hybrid is a front wheel drive vehicle and it **must** be towed with the front wheels off the ground. Failure to do so may cause serious damage to Hybrid Synergy Drive components.

- A flat bed trailer is the preferred method of towing.
- The vehicle may be shifted out of **P**ark into **N**eutral by turning the ignition-on, depressing the brake, then moving the gated shift lever to **N**.
- If the shift lever cannot be moved out of **P**ark, a shift lock release button is provided under the cover near the shift lever as shown in the illustration.
- If a tow truck is not available, in an emergency the vehicle may be moved for short distance at low speeds (below 18 mph (30km/h)).

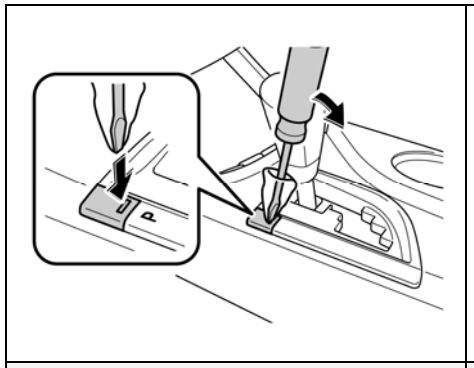
Remove Cover

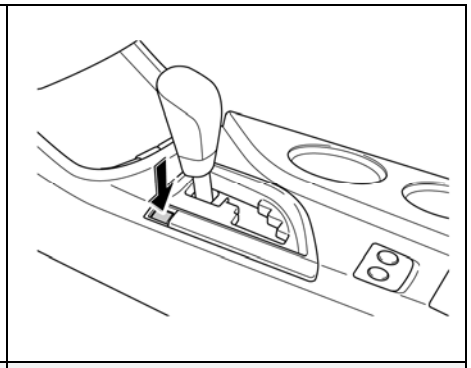
Push in Shift Lock Release Button

Roadside Assistance (Continued)

Electric Trunk Opener

The AVALON Hybrid is equipped with an electric trunk opener. In the event of 12 Volt power loss, the trunk can be opened using the following manual procedure:

- Pull down the rear armrest and open the door behind it.
- Pull the loop of the wire to unlock the trunk lid.

Fuel Filler Door Opening

The lock of the fuel filler door is linked with the door lock. When the doors are unlocked, the fuel filler door can be opened by pressing it. In the event of 12 Volt power loss, a manual release is located inside the trunk as shown in the illustration.

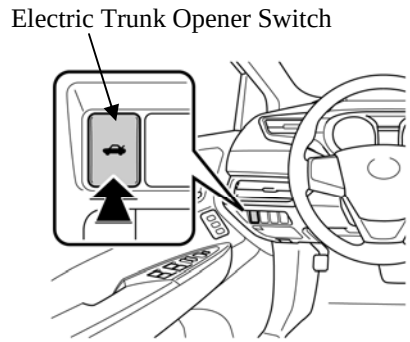

Electric Trunk Opener Switch

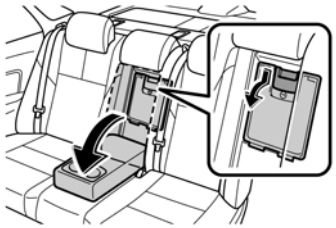

Manual Trunk Opening

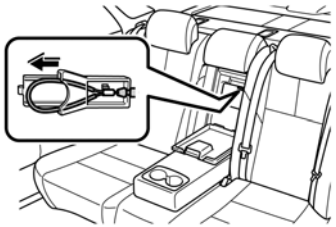

Manual Trunk Opening

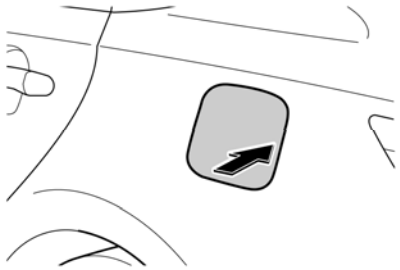

Open Fuel Filler Door

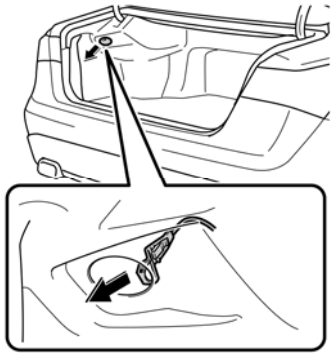

Manual Fuel Filler Door Release

Spare Tire

The tools, jack and spare tire are provided as shown.

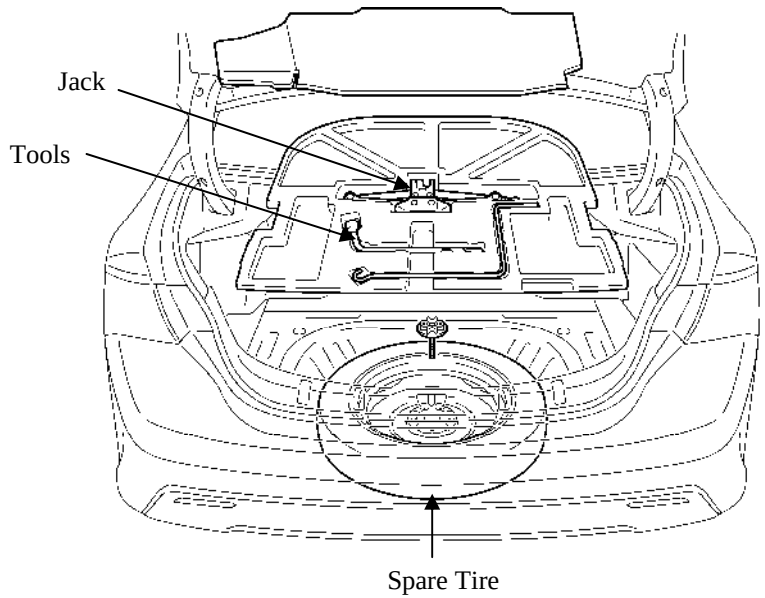

Tools, Jack and Spare Tire in the Trunk

Roadside Assistance (Continued)

Jump Starting

The 12 Volt auxiliary battery may be jump started if the vehicle does not start and the instrument cluster gauges are dim or off after depressing the brake pedal and pushing the power button.

NOTE:
The **12** Volt auxiliary battery is located in the trunk. To manually open the trunk, pull down the rear armrest and open the door behind it. Pull the loop of wire to unlock the trunk lid.

- Open the trunk and remove the luggage compartment side trim cover on the passenger side.
- Connect the positive jumper cable to the positive terminal following the numbered sequence.
- Connect the negative jumper cable to the negative terminal following the numbered sequence.
- Place the smart key in proximity to the interior of the vehicle, depress the brake pedal and push the power button.

  NOTE:
  If the vehicle does not recognize the smart key after connecting the booster battery to the vehicle, open and close the driver door when the vehicle is shut off.

  If the smart key internal battery is dead, touch the Toyota emblem side of the smart key to the power button during the start sequence. See the instructions and illustrations on page 9 for more details.
- The high voltage HV battery pack cannot be jump started.

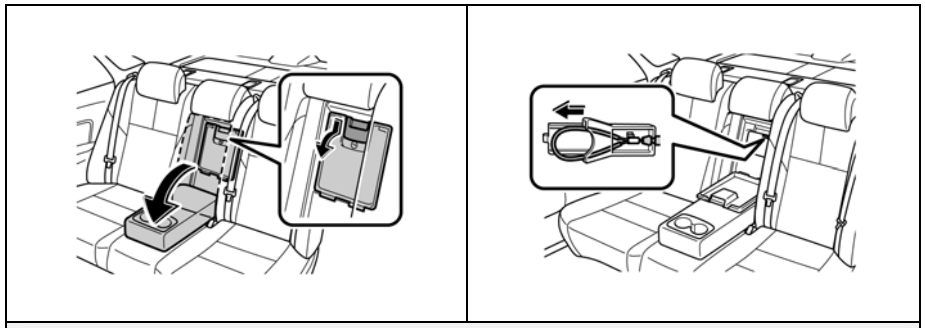

Manual Trunk Opening

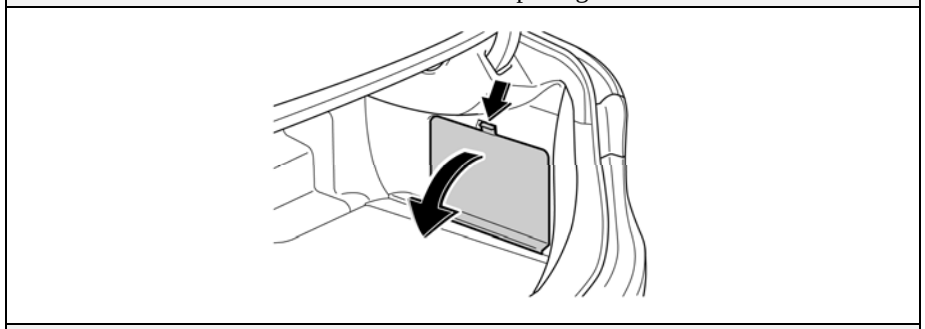

Remove Luggage Compartment Side Trim Cover

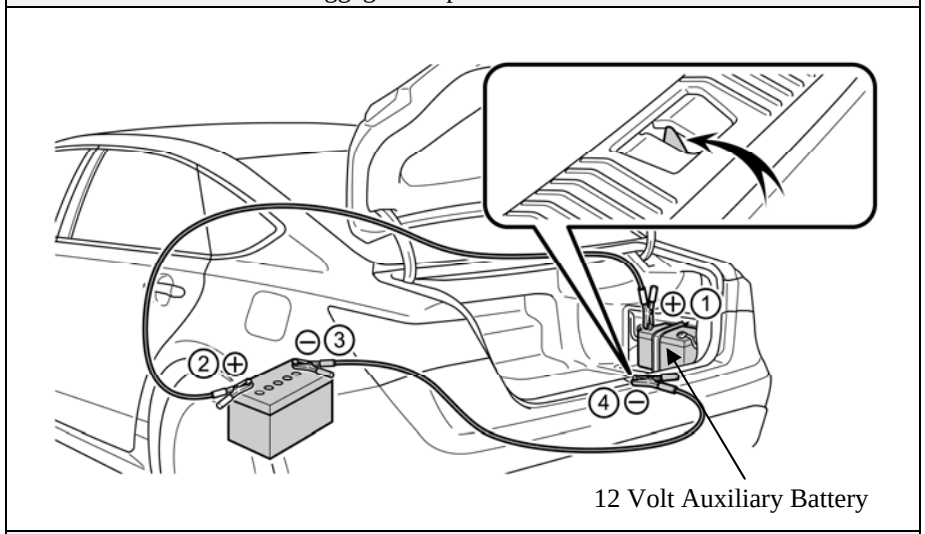

Jumper Cable Connections

Roadside Assistance (Continued)

Immobilizer & Anti-Theft Alarm

The AVALON Hybrid is equipped with a standard immobilizer system and an anti-theft alarm.

- The vehicle can be started only with a registered smart key.

- To disarm the anti-theft alarm, unlock the door by using the smart key button, hidden metal cut key, or door handle touch sensor. Changing the power button mode to ignition-on or starting the vehicle will also disarm the anti-theft alarm.