2012

FUSION HYBRID

MKZ HYBRID

EMERGENCY RESPONSE GUIDE

FCS-15129-12 08/2011

FOREWORD

The emergency response procedures for the Fusion Hybrid and MKZ Hybrid vehicles are similar to those for traditional gasoline-powered vehicles with the addition of special considerations for the high-voltage electric system components.

The Fusion Hybrid and MKZ Hybrid vehicles use a conventional gasoline engine in addition to an electric motor to power the vehicle.

- Gasoline is stored in a traditional fuel tank.
- Electricity is stored in a high-voltage battery pack.

The combination of a gasoline engine and electric motor provides for improved performance (V6 performance with a 4-cylinder engine and electric motor), reduced emissions and improved fuel economy. The high-voltage system is self contained, never needing to be plugged into an electrical outlet for recharging. The system incorporates a generator that recharges the high-voltage batteries during cruising and braking.

The information in this guide will allow response to emergencies involving the Fusion Hybrid and MKZ Hybrid vehicles to be as safe as non-hybrid vehicles.

The Fusion Hybrid and MKZ Hybrid vehicles have been designed with many safety features for your protection. These features help provide safe access to the vehicle under various conditions; however, when approaching a high-voltage vehicle in a fire, rescue or recovery situation, always follow one industry standard rule:

ALWAYS ASSUME THE VEHICLE'S HIGH-VOLTAGE SYSTEM IS POWERED UP !

HYBRID VEHICLE IDENTIFICATION

- The Fusion Hybrid and MKZ Hybrid vehicles can easily be identified by the "Hybrid" badges located on the left and right front doors. There is a "Hybrid" nameplate on the trunk lid that also includes the green leaf/blue highway "Hybrid" icon.

NOTE: Fusion Hybrid shown, MKZ Hybrid similar.

Hybrid nameplate and icon on trunk lid.

Hybrid nameplate with Hybrid icon on front doors.

- The Fusion Hybrid and MKZ Hybrid vehicles have a unique engine appearance cover with a raised “HYBRID” icon on it.

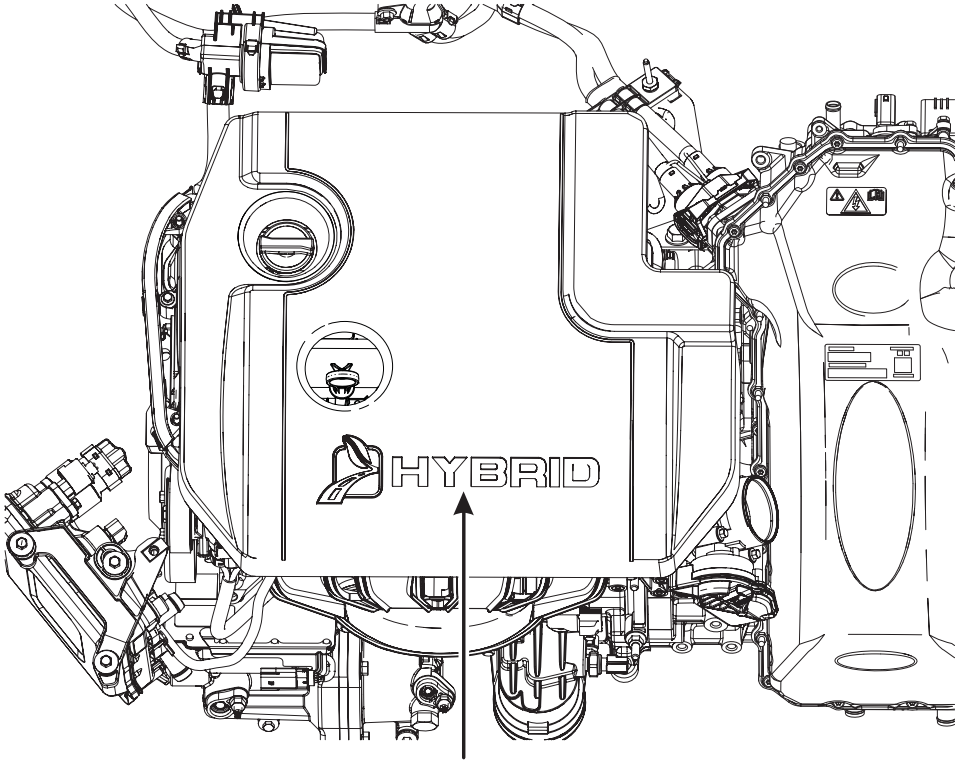

Unique Hybrid engine appearance cover
with raised lettering and icon

- The 5th, 6th and 7th digits of the Vehicle Identification Number (VIN) identify the Hybrid vehicle line.

VIN POSITIONS 5, 6 and 7	VEHICLE
P0L	Fusion Hybrid — Front Wheel Drive (FWD)
L2L	MKZ Hybrid — Front Wheel Drive (FWD)

SAMPLE VIN

3 F A D P 0 L 3 0 A R 1 0 0 0 0 1

Fusion Hybrid FWD

HIGH-VOLTAGE ELECTRICAL DISCONNECT FEATURES

The following list describes certain features that have been incorporated into the Hybrid vehicles that allow for either simple or automatic shut off of the high-voltage electrical systems.

- High-Voltage Fuse — In the event of a high-voltage short circuit, the high-voltage fuse will open, disabling the high-voltage system.
- High-Voltage Interlock Circuit — Whenever a high-voltage connector is disconnected, the high-voltage interlock circuit opens and disables the high-voltage system.
- Ignition Key in the OFF Position — Any time the ignition lock cylinder is in the OFF position, the high-voltage system is disabled.
- High-Voltage Service Disconnect — Whenever the high-voltage service disconnect (located behind the rear seat) is removed, the high-voltage system is disabled. For additional information, refer to Page 8 in this manual.
- Thermal Sensors — In the event that the ignition key is left in the ON position, this may cause the high-voltage battery temperature to exceeds 60°C (140°F); if this temperature is reached, the thermal sensors located near the high-voltage battery will automatically disable the high-voltage battery.

HIGH-VOLTAGE WARNING DECALS

- On Hybrid vehicles, WARNING decals are located on components in the high-voltage system throughout the vehicle. Please see example below.

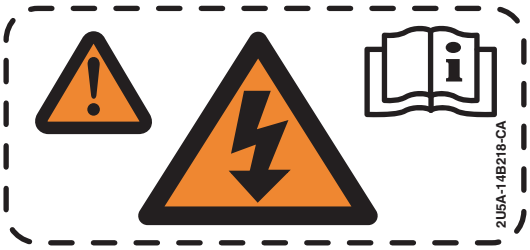

WARNING: HIGH VOLTAGE VEHICLE

TO REDUCE THE RISK OF POSSIBLE SERIOUS INJURY (SHOCK OR BURN) OR DEATH:

COMPONENTS MARKED WITH THE HIGH VOLTAGE SYMBOL CONTAIN HIGH VOLTAGE AND HIGH TEMPERATURES AND SHOULD BE AVOIDED. SERVICE MUST BE PERFORMED BY QUALIFIED PERSONNEL ONLY.

AVERTISSEMENT : CIRCUITS HAUTE TENSION DU VÉHICULE

POUR RÉDUIRE LES RISQUES DE BLESSURES GRAVES (CHOCS OU BRÛLURES) OU MORTELLES :

LES ÉLÉMENTS ACCOMPAGNÉS DU SYMBOLE HAUTE TENSION ONT UNE TENSION ET DES TEMPÉRATURES ÉLEVÉES ET DOIVENT ÊTRE ÉVITÉS.

LA RÉPARATION ET L'ENTRETIEN DOIVENT ÊTRE EFFECTUÉS PAR UN TECHNICIEN QUALIFIÉ SEULEMENT.

4L8A-14B218-AB

HYBRID COMPONENT LOCATION AND IDENTIFICATION

The illustration below and its defining chart on Page 7, provide the location, description and basic function of the Hybrid system components.

NOTE: All high-voltage wires and harnesses are wrapped in orange-colored insulation.
NOTE: Fusion Hybrid shown, MKZ Hybrid similar.

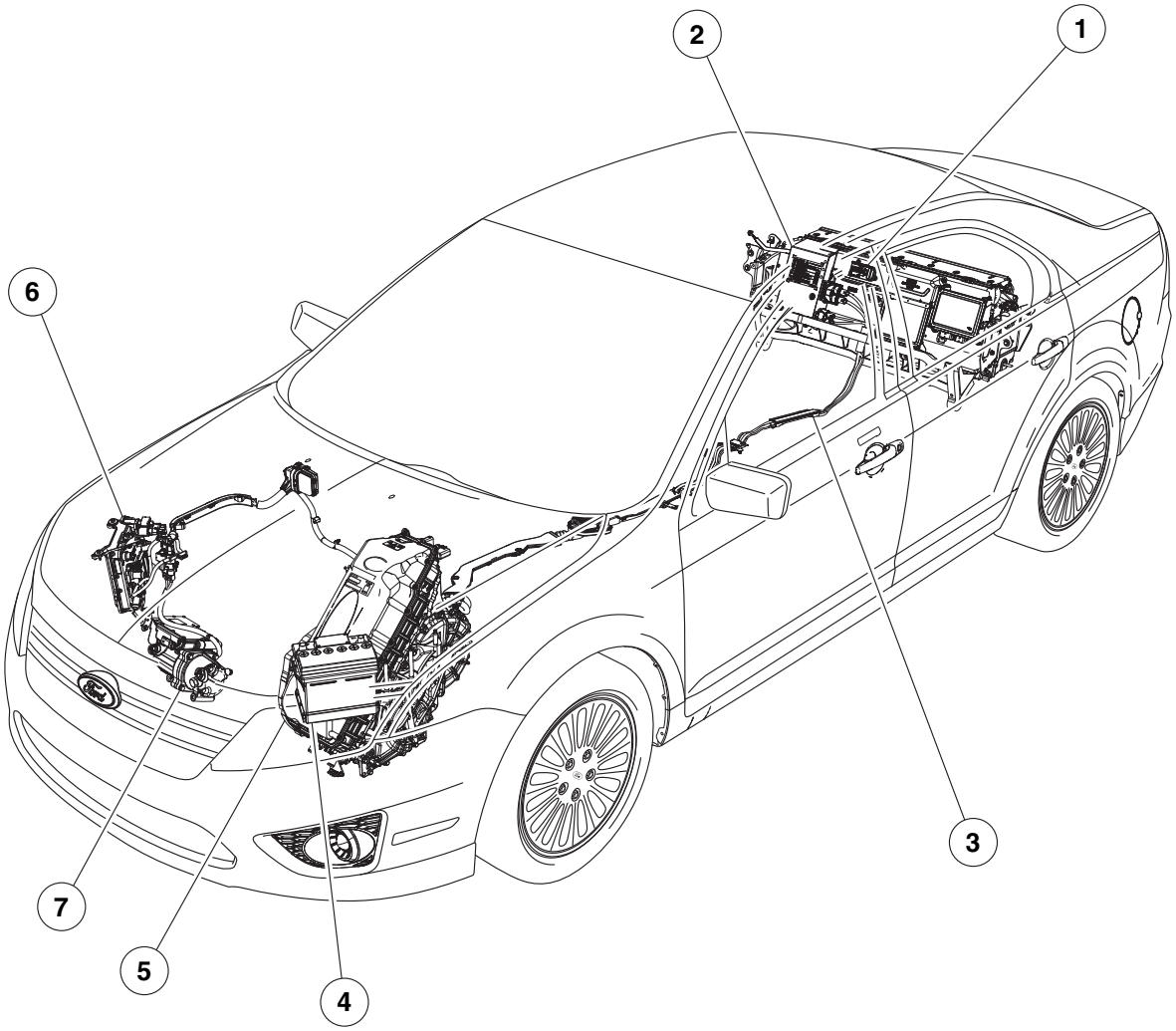

HYBRID COMPONENT LOCATION AND IDENTIFICATION - CONTINUED

	COMPONENT	LOCATION / DESCRIPTION	FUNCTION
1	High-Voltage Service Disconnect	• Located behind the rear seatback. • Orange rectangle with a molded plastic handle, about 100 mm (4 in) in length.	Provides means to disconnect high-voltage battery for safely servicing vehicle.
2	High-Voltage Battery Approximately 300 Volts DC	• Located behind the rear seatback. • Sealed nickel-metal hydride.	Provides high-voltage storage for vehicle's electric motor.
3	High-Voltage Wiring	• Runs along the vehicle's floorpan from the high-voltage battery to the Electronically Controlled Continuously Variable Transaxle (ECVT), to the DC-to-DC converter, then the electric A/C unit. • All high-voltage wiring has orange-colored insulation.	Provides physical connection between High-Voltage battery and vehicle's High-Voltage equipment.
4	12-Volt Battery	• Located under the hood on the driver side of the vehicle. • Typical automotive 6-cell lead/acid design.	Provides 12-volts for vehicle accessories.
5	Electronically Controlled Continuously Variable Transaxle (ECVT)	• Transverse-mounted design, similar to the non-Hybrid Fusion MKZ vehicles. • Contains the traction motor, generator motor and hybrid electronics.	Provides rotational force to wheels for vehicle propulsion, generates electricity to recharge batteries during operation and contains some electronics.
6	DC/DC Converter	• Located under the hood on the passenger side, forward of the strut tower. • It has orange high voltage wires and Motor Electronics Cooling System hoses attached to it.	Provides 12 volts to charge the 12-volt battery and run vehicle accessories.
7	Electric A/C Compressor	• Located in front of the engine. • It has an orange high voltage wire attached to it using an interlock connector.	Provides electric A/C operation; replaces the belt driven A/C compressor.

HIGH-VOLTAGE SERVICE DISCONNECT

To gain access to the high-voltage service disconnect, the rear seat must be lowered. The rear seat is released from the trunk area.

- Locate the seat's 2 backrest release levers. They are between the high-voltage battery and the body sheet metal.
- Push the release levers toward the outboard side of the vehicle.

NOTE: Fusion Hybrid shown, MKZ Hybrid similar.

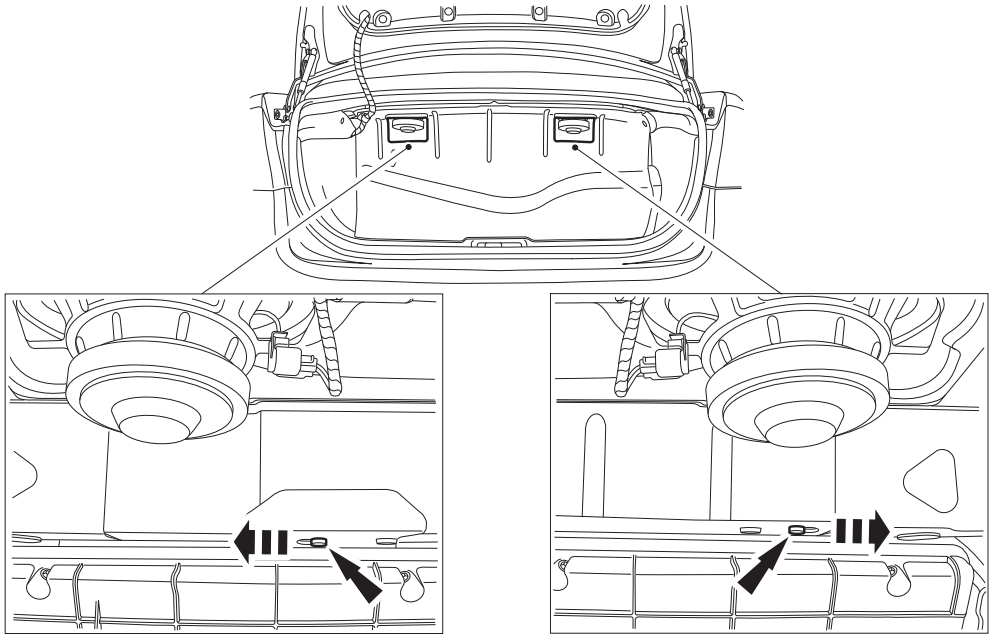

HIGH-VOLTAGE BATTERY PACK

WARNING: Do not cut, weld, or screw into the high-voltage battery case Do not penetrate the batteries or case in any way.

- The high-voltage battery pack is located behind the rear seatback.
- Removing the high-voltage service disconnect will disconnect the high-voltage from the vehicle. The battery pack will remain live and dangerous.
- The total voltage of the battery pack is approximately 300 volts DC.
- The battery case is designed to be water resistant.
- The battery cells contain a base electrolyte, consisting of potassium hydroxide as the dominant active ingredient, that is absorbed in a special paper. The electrolyte will not leak from the battery under most conditions, however, if the battery is crushed, it is possible for a small amount of electrolyte to leak.

WARNING: The following must be followed when working with a damaged battery:

- Exposure to electrolyte could cause skin and/or eye irritation and/or burns. If exposed, rinse with large amounts of water until the soapy feel is gone. Personal Protective Equipment (PPE) such as splash shield or safety goggles, gloves (latex, rubber or Nitrile), an apron or overcoat suitable to protect against alkaline and rubber boots are required when handling damaged batteries. Fold-down helmet shields are not acceptable for acid or alkaline spills.
- If the battery is exposed to intense heat, it is possible that hydrogen could be released from the battery. Appropriate precautions should be taken to make sure the area is properly ventilated, such as opening the vehicle's windows or doors.

NOTE: If possible, lift the handle to release and remove the high-voltage service disconnect.

NOTE: Fusion Hybrid shown, MKZ Hybrid similar.

NOTE: The high-voltage service disconnect is removed from inside the passenger compartment.

APPROACHING A DAMAGED HIGH-VOLTAGE VEHICLE

1. FOLLOW EXISTING TRAINING AND INCIDENT COMMANDER DIRECTION

- This guide provides only supplemental information as it pertains to the Fusion Hybrid and MKZ Hybrid vehicles. The same rules apply when approaching any potential high-voltage situation. Always follow your high-voltage safety training. Some precautions to take in a high-voltage situation include:

  — Remove all jewelry: Watches, necklaces and earrings. Remove any metal objects that are conductors of electricity.

  — Wear the necessary PPEs: High-voltage rubber gloves, face shield, insulated boots, protective raincoat and apron.

- Bring the following equipment:

  — Class ABC powder-type fire extinguisher.

  — A nonconductive object, about 1.5 m (5 ft) long. This can be used to safely push someone away from the vehicle if they accidentally come in contact with high-voltage.

2. APPROACHING A DAMAGED VEHICLE

- Disable the high-voltage electrical system using as many of the following steps as possible:

  — Secure the vehicle: Place the shift lever into the PARK position. Remove the ignition key; removing the ignition key or turning the key to the OFF position will disconnect the high-voltage system. Block the wheels, if necessary.

  — Disconnect the negative cable from the 12-volt battery: Doing this disables the high-voltage system.

  — If possible, remove the high-voltage service disconnect. For additional information, refer to Page 8 in this manual.

APPROACHING A DAMAGED VEHICLE - CONTINUED

- If the vehicle is on fire, use a Class ABC powder-type extinguisher to contain and smother the flames. If water is being used, **LARGE** amounts of water will be required to extinguish the flames. A fire-hydrant or dedicated fire hose can supply the needed amount.

- If the vehicle has any exposed cables, make sure to wear high-voltage rubber gloves and other protective clothing. Do not touch any broken or damaged high-voltage orange cables. Treat severed cables as if they contain high voltage.

- If the vehicle is submerged in water, do not touch any high-voltage components or orange cables while extricating the occupant(s). Do not remove the vehicle until you are sure the high-voltage battery is completely discharged. A submerged high-voltage battery may produce a fizzing or bubbling reaction to the water. The high-voltage battery will be discharged when the fizzing or bubbling has completely stopped, however, still treat it as if it was not discharged.

3. IF THE HIGH-VOLTAGE BATTERY CASE HAS BEEN RUPTURED

- Just like any other battery, hose the area down with **LARGE** amounts of water.

4. MOVING DAMAGED VEHICLES — WRECKER DRIVERS

- Turn the vehicle ignition key to the ACCESSORY position to release the locked steering wheel.

- If possible, remove the high-voltage service disconnect. For additional information, refer to page 8 in this manual.

- Follow the guidelines in the Wrecker Towing Manual.

  — Front Tow: Wheel Lift (FWD)

  — Rear Tow: Wheel Lift with Dolly (FWD)

  — Flatbed: FWD and AWD

5. SPECIAL NOTE TO SALVAGE YARDS

- If a vehicle with a high-voltage battery is to be scrapped, the high-voltage battery must be disposed of following all local, state/provincial and federal guidelines.