The Power to Surprise

Emergency Rescue Guide Manual

SOUL EV

Contents

Introduction 1

Document Purpose 1

Vehicle Description 2

Soul Identification 2

Identifying a Kia Soul 2

Soul Main Electronic Systems 6

Power Electronics Specification 6

Vehicle Components 7

Airbag system (SRS: Supplemental Restraint System) 10

Emergency Procedures 14

Initial Response: Identify, Immobilize and Disable 14

Extraction Operations 20

Vehicle Fire 22

Submerged or Partially Submerged Vehicles 23

High Voltage Battery Damage and Fluid Leaks 24

Roadside Assistance 25

Towing 25

Emergency Starting 26

Document Purpose

The purpose of this document is to familiarize first responders and the towing/roadside assistance industry with the proper methods to handle the Soul EV in an emergency situation. This guide gives a basic overview of key vehicle systems and instructions for dealing with the different types of emergencies encountered by first responders. The emergency response procedures for this vehicle will provide how to deal with the high voltage electrical system.

Within this Emergency Response Guide you will find *Cautions*, *Warnings* and *Dangers* which provide critical information and help you do your job safely and efficiently. Below are the definitions of these terms. When you see a *Caution*, *Warning* or *Danger*, be certain you understand the message before you attempt to perform any part of an emergency response procedure.

⚠ DANGER

A Danger alerts you to a hazardous situation which, if not avoided will result in death or serious injury.

⚠ WARNING

A Warning alerts you to a hazardous situation which, if not avoided, could result in death or serious injury.

⚠ CAUTION

A Caution alerts you to a hazardous situation which, if not avoided, could result in minor or moderate injury.

Vehicle Description

The Kia Soul EV uses a high voltage battery and a electric motor to power the vehicle without any fuel unlike a conventional vehicle that uses a standard combustion engine. The Soul EV is an eco friendly vehicle which does not produce any exhaust emissions.

Identifying a Kia Soul

"Eco electric" logo on tail gate

The Kia Soul EV can be easily identified by the "Eco electric" logo attached on the tail gate.

DANGER **Electrocution Risk**

The eco electric logo may be missing or hidden after a crash due to damage to the vehicle. Always be sure to utilize additional methods of identification before determining that the vehicle is not an electric car.

VIN Label

The VIN (Vehicle Identification Number) identifies an electric car with a "G" or "H" displayed in the 8th position, as shown in the below drawing.

The VIN can be found:

1) Underneath the front passenger seat (or driver seat).

2) On the vehicle certification label attached to the driver's side (or passenger) center pillar.

3) On a plate attached to the top of the dashboard. The number on the plate can easily be seen through the windshield from outside.

XXXXXXX1XXXXXXXXX

8th position (1 or 2)

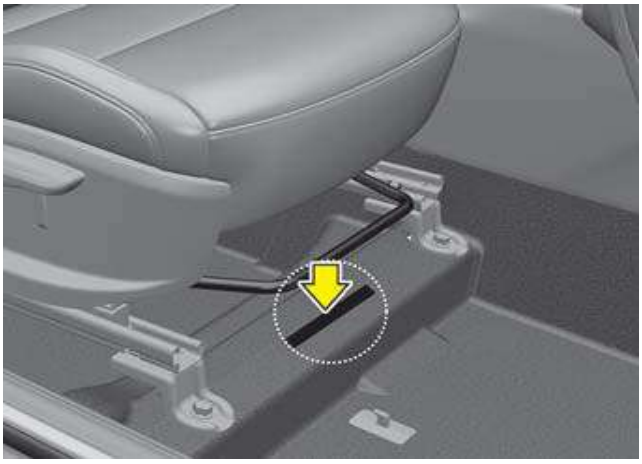

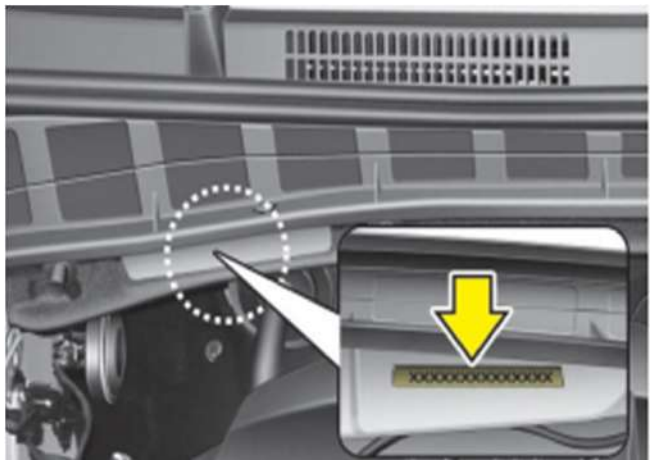

Soul EV Cluster Instrument Panel

The Soul EV Cluster Instrument Panel displays the EV specific features such as high voltage battery SOC (State of Charge) as highlighted below.

Charge Status Indicator

The battery charge status indicator (3 separate lights), visible from outside on the center of the dashboard is illuminated when the vehicle is charged with an AC or DC charger. The number of lights illuminated indicates the charge level of the battery.

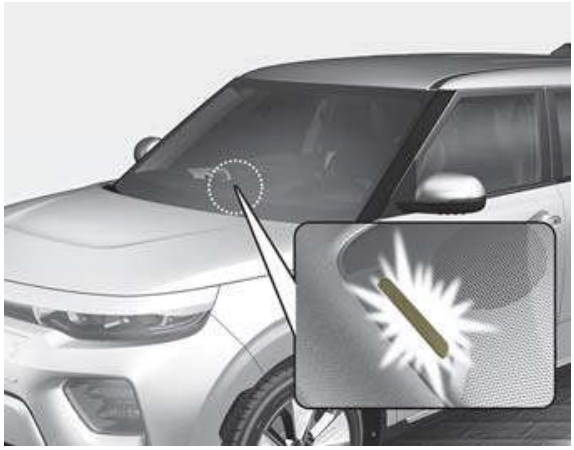

Charging Port

The charging port is located on the front left bumper.

Note : The doors must be un-locked to open the charge port door.

How to open the charging port

1. Press the unlock door button, depress the brake pedal and apply the parking brake.
2. Turn OFF all switches, move the shift lever to P (Park) and turn off the vehicle.
3. Open the charging door by pressing it.

Unlock charging door in emergency

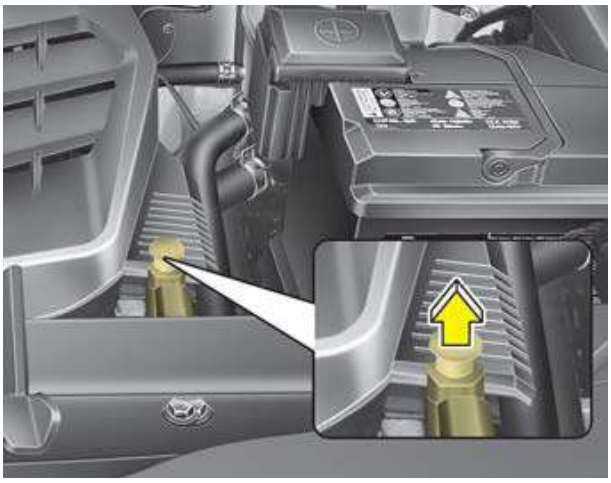

If the charging door does not open due to battery discharge, open the hood and slightly pull the emergency cable as shown left.
The charging door will then open.

High Voltage System

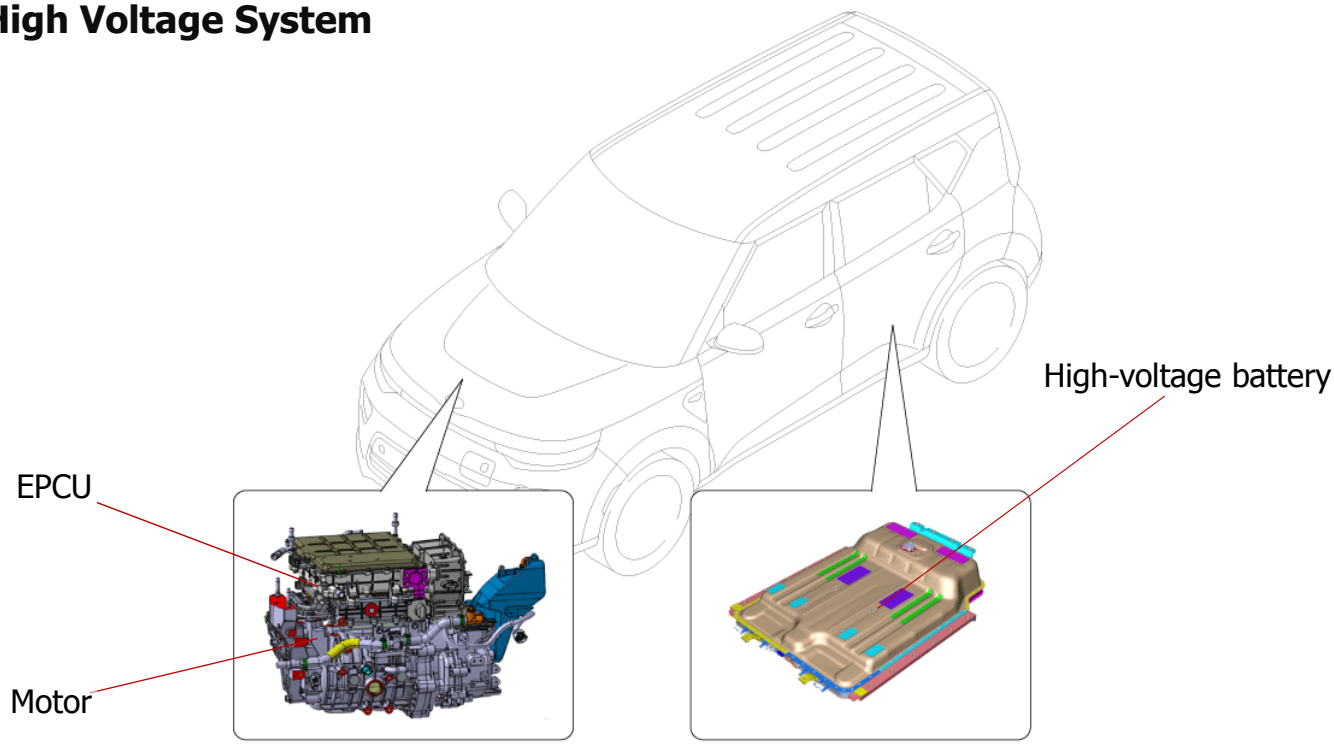

Motor		**Type**	**Permanent magnet synchronous motor**	
		Max. Output HP(kW)	**201 (150)**	
		Max Torque lb-ft(Nm)	291 (395)	
EPCU	**Inverter**	**Input Voltage(V)**	245 ~ 421.4	
	LDC	Max. Output HP(kW)	2.4 (1.8)	
High Voltage Battery		Type	Lithium-ion polymer	
			Extended type	Economical type
		Rated Voltage (V)	**240 – 412**	**225 - 387**
		Capacity (Ah) / Energy (kWh)	180 / 64.0	120 / 39.2
		Quantity for Pack (Cell / Module)	98Cells / 5Modules	90Cells / 3Modules

Vehicle components

12V auxiliary battery

The 12V auxiliary battery is located in the left side of the electric motor room, and powers all of the vehicle's standard electronics like radio, lights, door locks, power windows, etc. Also, it powers the EPCU (Electric Power Control Unit) which controls the high voltage current to main electronic systems like the motor and high voltage junction box.

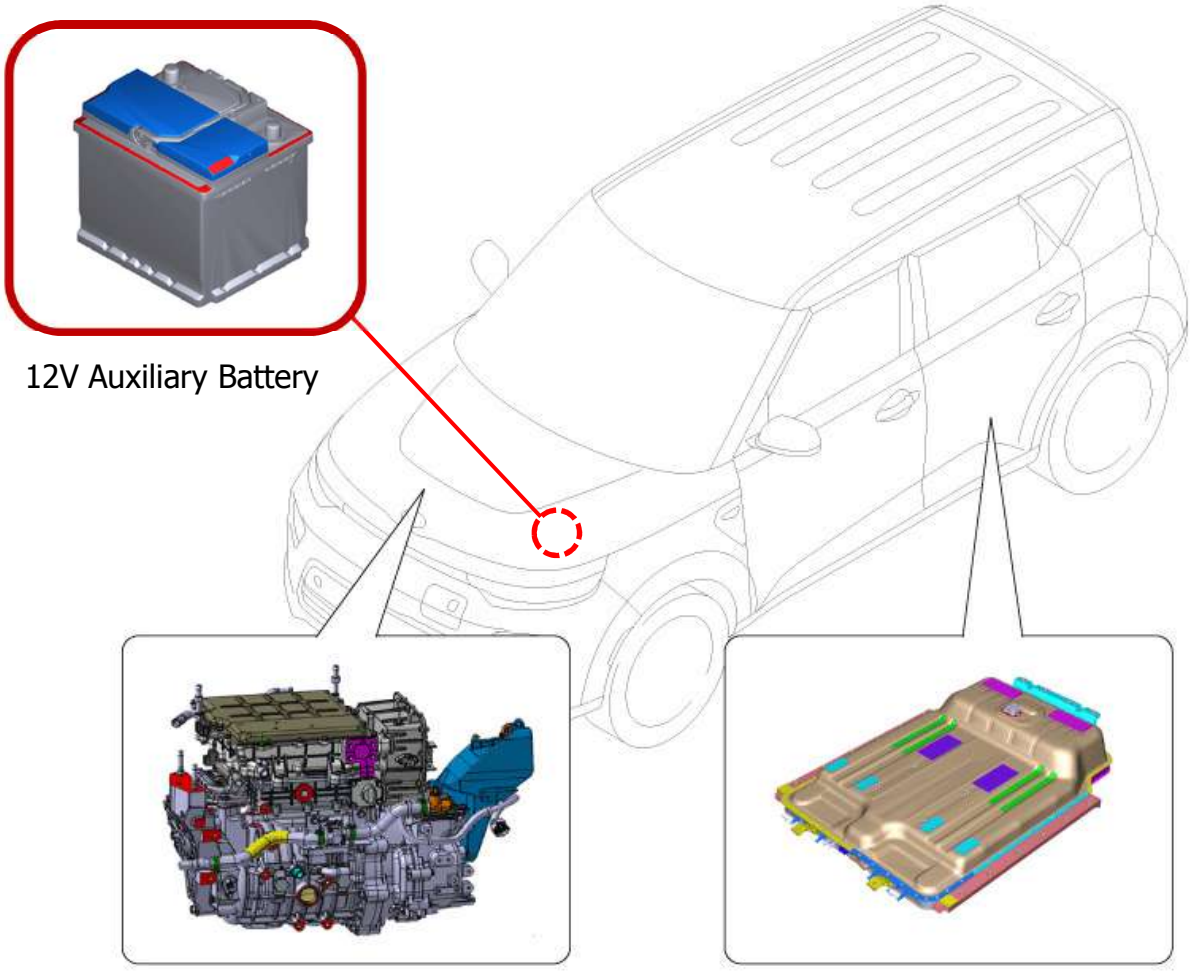

Motor

The motor of the EV converts electrical energy into motive force with a Max. power of 201Hp (150kW) and Max. torque of 291lb-ft (395Nm).

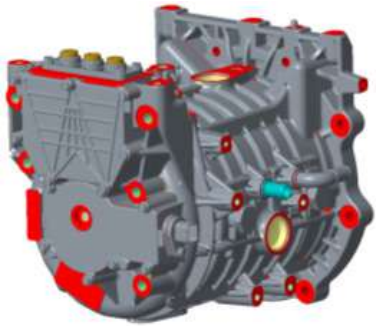

Electric Power Control Unit (EPCU)

The EPCU includes an Inverter and LDC (Low Power DC-DC Converter) in one housing. The inverter converts DC to AC to supply electricity to the motor. It also converts AC to DC to charge the high voltage battery. The LDC converts high voltage electricity to 12 voltage to charge the 12V auxiliary battery.

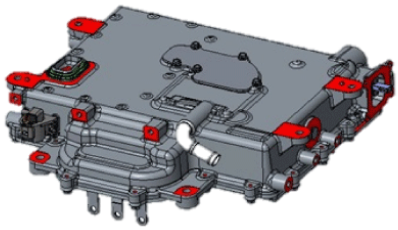

High voltage battery

The HV Lithium ion polymer battery supplies and stores electric energy, to the traction motor, and is located under the Soul EV chassis.

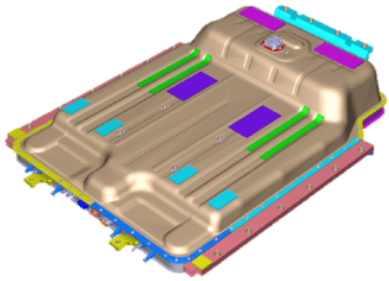

On-Board Charger (OBC)

The OBC is the battery charging equipment that converts external AC to DC to charge the high voltage battery.

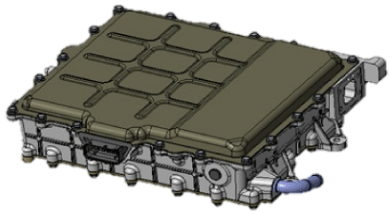

High Voltage Orange Cabling

The High Voltage cabling is orange, per Society of Automotive Engineers (SAE) standards. Cables run under the floor of the vehicle and connect the High Voltage Battery to the EPCU, Motor, LDC, Inverter, OBC, A/C compressor and other High Voltage components located towards the front of the vehicle.

The presence of orange cables under the hood, on the under-floor battery compartment, or HV cables under the car, identifies the vehicle as an electric vehicle.

DANGER **High Voltage Cables**

- *Never cut or disconnect the high voltage orange cabling and connectors without first disabling the HV system by removing the safety plug (refer to page 17).*
- *Exposed cables or wires may be visible inside or outside the vehicle. Never touch the wires, cables, connecters, or any electric components before disabling the system.*

Failure to follow these instructions will lead to serious bodily injury or death by electrical shock.

Airbag system (SRS: Supplemental Restraint System)

Airbag

Six (6) airbags are installed in the Soul EV, located in the areas shown in the image below. Before performing any emergency procedure, make sure the vehicle ignition switch is turned off and disconnect the negative connector from the 12V auxiliary battery (located in the left side motor compartment) to prevent accidental deployment of undeployed airbags.

(1) Driver front airbag
(2) Passenger front airbag
(3) Side airbag
(4) Curtain airbag

❊ The actual air bags and seats in the vehicle may differ from the illustration.

Seat Belt Pretensioner

In the Soul EV, the driver's and front passenger's seat belts are equipped with pretensioners. When the seat belt pretensioners are activated in a collision, a loud noise may be heard and fine dust, which may appear to be smoke, may be visible in the passenger compartment. These are normal operating conditions and are not hazardous. The seat belt pretensioner assembly mechanisms may become hot during activation, and may need several minutes to cool down after they have been activated.

Airbag system components

[SRSCM]

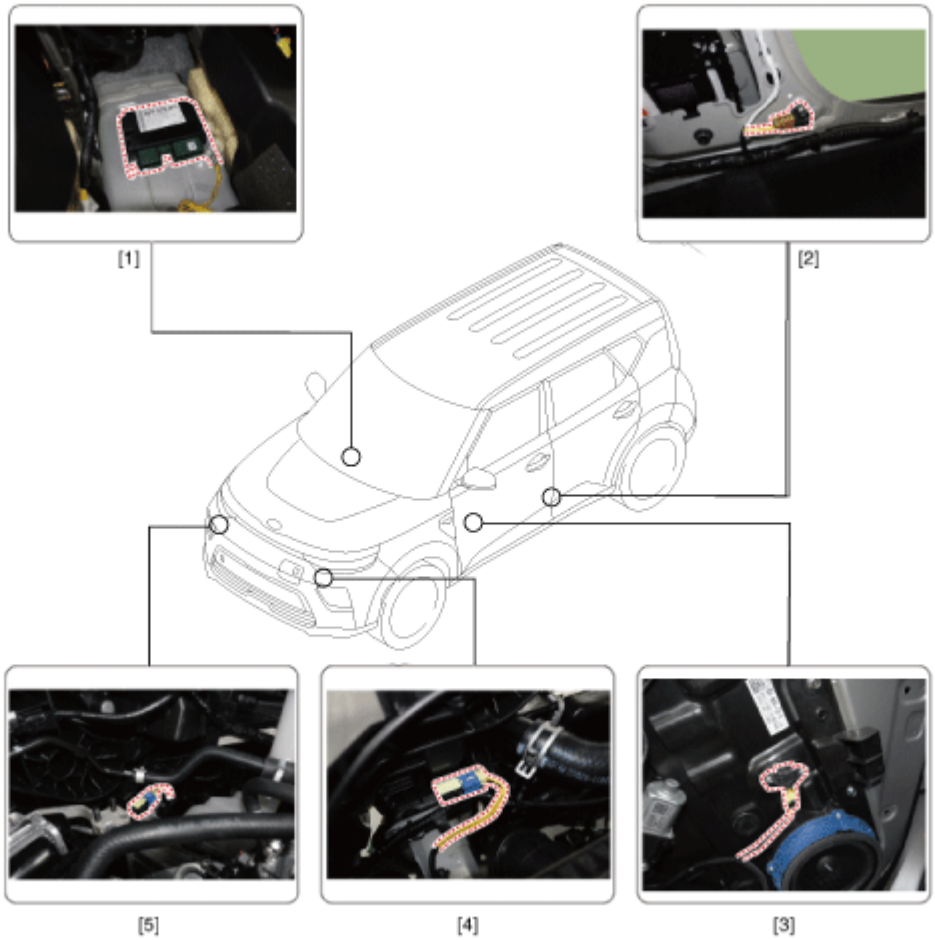

1. Supplemental Restraint System Control Module (SRSCM)
2. Front Gravity Side Impact Sensor (G-SIS)
3. Pressure Side Impact Sensor (P-SIS)
4. Front Impact Sensor (FIS)
5. Front Impact Sensor (FIS)

[Airbag Module]

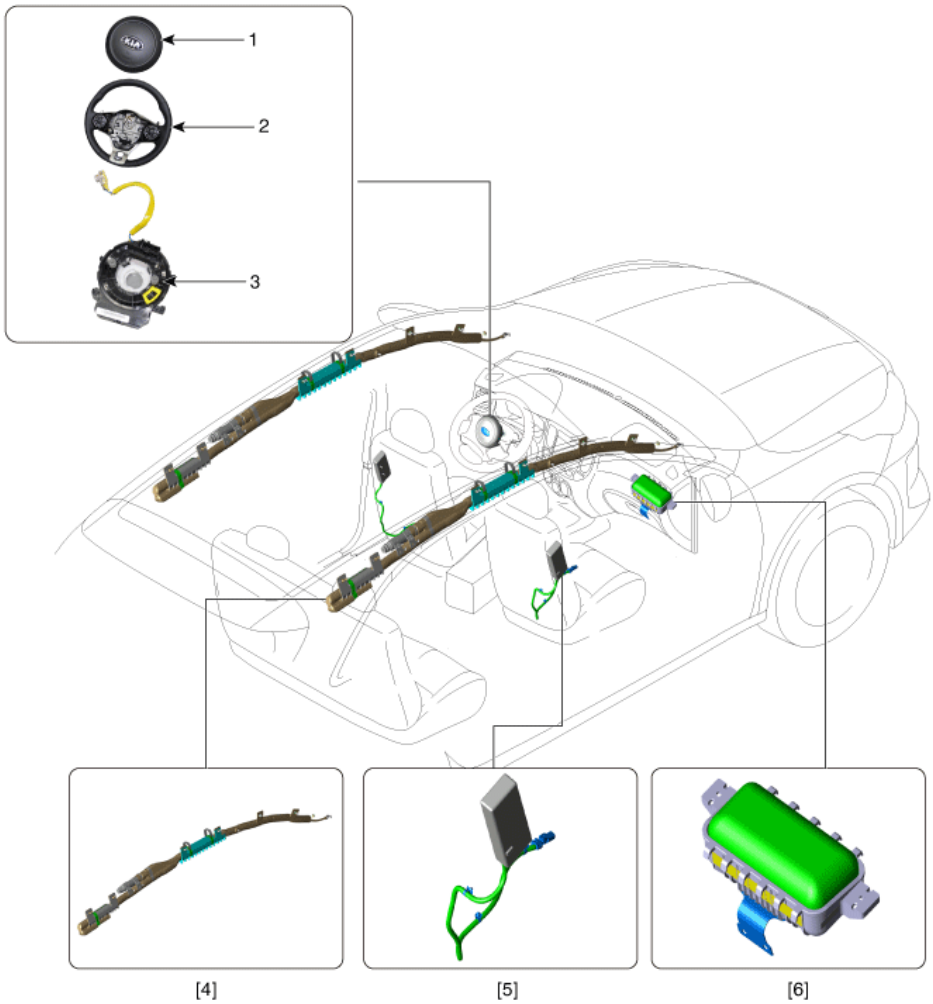

1. Driver Airbag (DAB) Module
2. Steering Wheel Assembly
3. Clock Spring
4. Curtain Airbag (CAB) Module
5. Side Airbag (SAB) Module
6. Passenger Airbag (PAB) Module

[Seat Belt System]

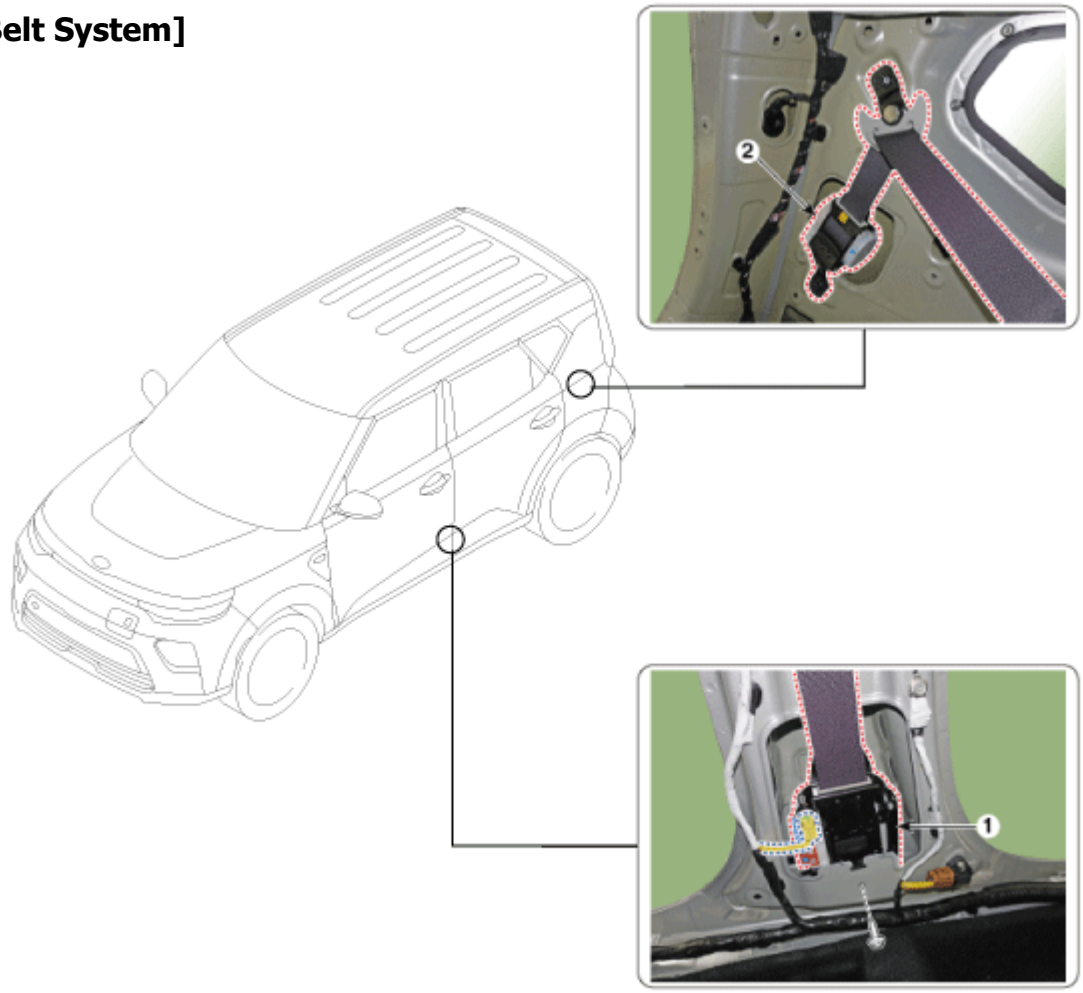

1. Seat Belt Pretensioner (BPT)
2. Rear Seat Belt Retractor

WARNING **Undeployed Airbags**

To avoid injuries caused by accidental deployment of undeployed airbags

- *Make sure the vehicle ignition switch is turned off, disconnect the negative cable from the 12V auxiliary battery (located in the left side of motor room) and wait 3 minutes or longer to allow the system to deactivate.*

Failure to follow any of these instructions may result in serious injury or death from accidental deployment of the airbag system.

Initial Response: Identify, Immobilize and Disable

The following procedures should be used whenever you are dealing with a Soul EV at an emergency scene. All other operations should be consistent with your department's standard operating procedures or guides. When an EV is damaged in a crash, the high voltage safety systems may have been compromised and present a potential high voltage electrical shock hazard. Exercise caution and wear appropriate personal protective equipment (PPE) safety gear, including high voltage safety gloves and boots. Remove all metallic jewelry, including watches and rings.

Identify

The Soul EV is an electric vehicle. Emergency responders should respond to emergency scenarios involving the Soul EV accordingly, exercising extreme care and caution to avoid contact with the high voltage system within the vehicle.

Immobilize

The next step is to immobilize the vehicle to prevent any accidental movement that can endanger response personnel or civilians. When the Soul EV is damaged in a crash, the vehicle may appear to be shut off when it is not due to no engine sounds.
When the "READY" mode light is illuminated on the Instrument Panel, the vehicle can move silently using the electric motor. Responders should approach the vehicle from the sides and stay away from the front or rear as they are potential paths for vehicle movement. Be sure to immobilize the vehicle in the following manner.

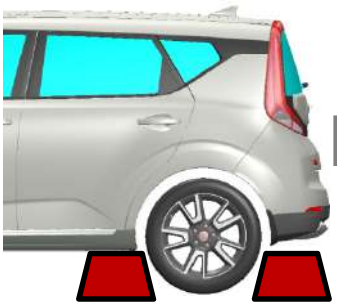

Chock the wheels

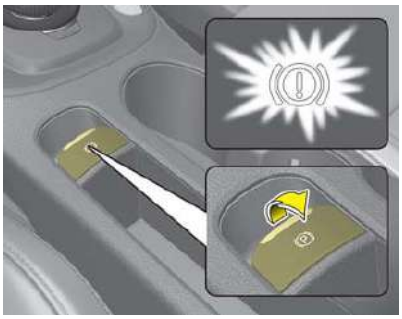

Set the parking brake.

Put rotary shifter dial in the P (Park) position

Disable

The final step in the initial response process, conducted after immobilizing the vehicle, is to disable the vehicle, its SRS components and the high voltage electrical system. To prevent current flow through the system, use one of the following procedures to disable the vehicle.

I . Disabling the System – Smart Key System and "POWER" START/STOP Button

1. Confirm the status of the READY light on the instrument panel. If the READY light is illuminated, the vehicle is ON.

   a) If the READY light is NOT illuminated, the vehicle is off. Do not push the "POWER" START/STOP button because the vehicle may start (go into READY mode).

"POWER" START/STOP Button

   b) To turn OFF the system, put rotary shifter dial in the P (Park) position and press the POWER button.

Without depressing the brake pedal

Pressing POWER button	POWER button LED color	Vehicle condition
	Off	Off
One time	Amber	Electrical accessories are operational.
Two times	Reddish orange	The warning lights can be checked before the vehicle is started.
Three times	Off	Off

While depressing the brake pedal

Pressing POWER button	POWER button LED color	Vehicle condition
	Off	Off
One time	Off	Ready to drive

2. If necessary, lower the windows, unlock the doors and open the tail gate as required, before disconnecting the 12V battery. Once the 12V battery is disconnected, power controls will not operate.

3. Before disconnecting 12V battery, remove the Smart Key at least 2 meters away from the vehicle to prevent accidental restart.

4. Use the following procedure to remove the safety plug and disable the high voltage battery:

a) Disconnect 12V auxiliary batter negative (-) terminal.

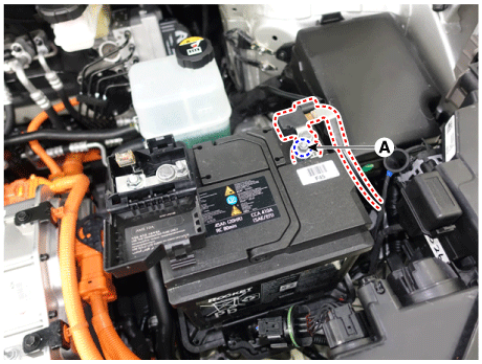

b) Remove the service plug cover (A) after removing rear seat cushion assembly.

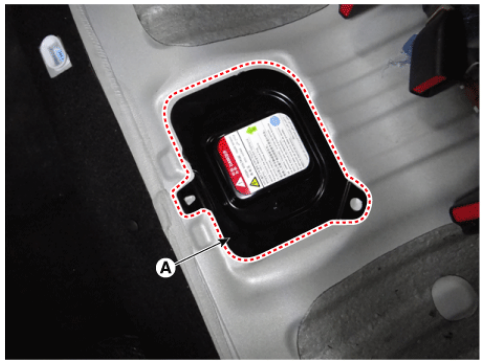

c) Remove the service plug (A).

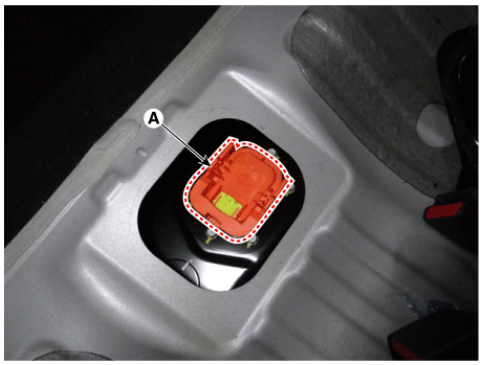

5. In case of emergency, cut the service interlock connector cable to isolate the high voltage of the battery.

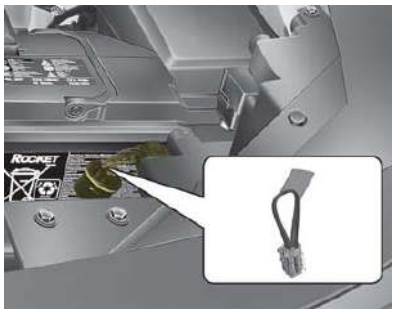

II. Disabling the System – IG (Ignition) Fuse Removal

1. Open the hood.

2. Remove the motor room fuse box cover.

3. If necessary, lower the windows, unlock the doors and open the tail gate as required, before disconnecting the 12V battery (located in the right side of motor room). Once the 12V battery is disconnected, power controls will not operate.

4. In the event the vehicle is unable to be disabled using the "Power" START/STOP Button, using the fuse puller located in the Motor room fuse box, pull both the IG1, IG2 Fuse from the motor room fuse box. If the IG fuses cannot be located, pull out all the fuses and relays in the fuse box.

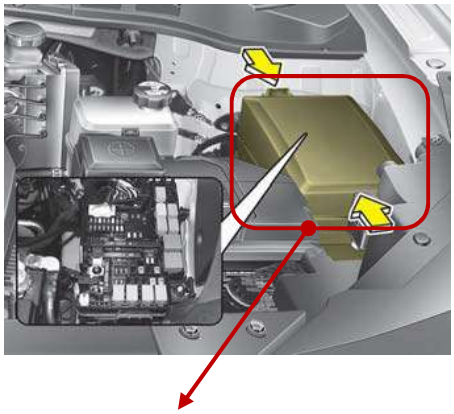

Motor room fuse box

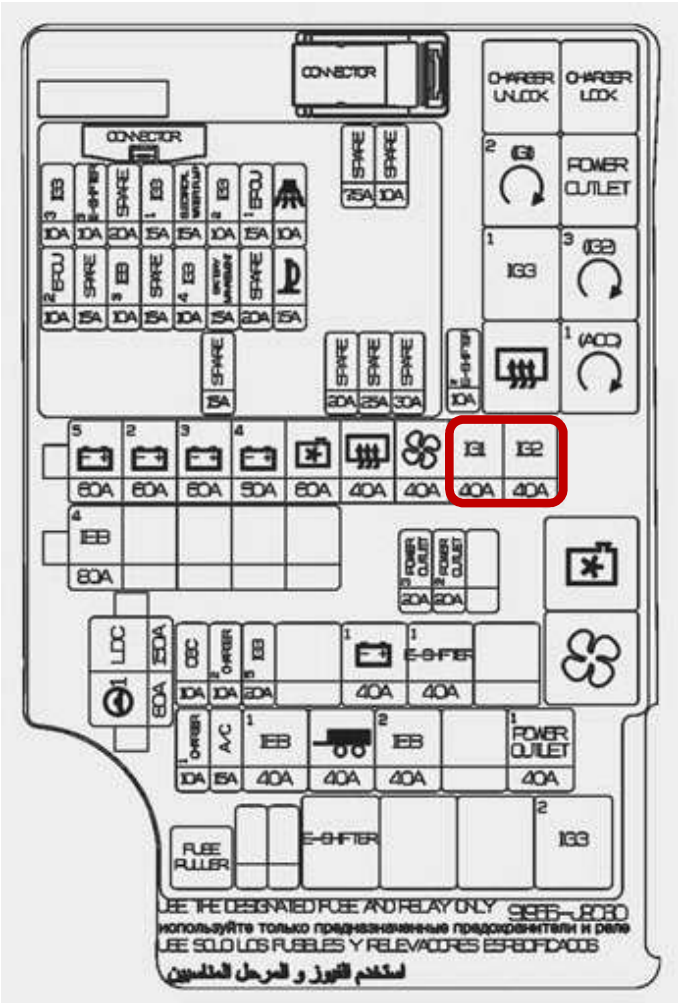

5. Remove the safety plug and disable the high voltage battery
   (Refer to No.4 procedure in page 17 and cut the HV interlock circuit wiring)

If previously mentioned methods of disabling the vehicle's system are unsuccessful, any emergency procedures involving the electric vehicle may cause the accidental deployment of undeployed airbags and electric shock from high-voltage components.

DANGER **Electrocution Risk**

- *Before engaging in any emergency response procedures, ensure the vehicle is disabled and wait 5 minutes to allow the capacitor in the high voltage system to discharge to avoid electrocution.*
- *Exposed cables or wires may be visible inside or outside the vehicle. Never touch the wires or cables before disabling the system.*

Failure to follow these instructions will lead to serious bodily injury or death by electrocution.

Extraction Operations

The Soul EV is an electric model. Because of the high voltage components contained therein, first responders should pay special attention when they extract occupants in the car. Before performing any extraction operations, the first responders should "Identify, Immobilize and Disable" the vehicle as discussed in sections on page 14-19.

Vehicle Stabilization

Use standard stabilization (cribbing) points, as shown beside. Always be sure to connect to a structural member of the vehicle and avoid placing cribbing under high voltage cables, fuel lines and other areas not normally considered acceptable.

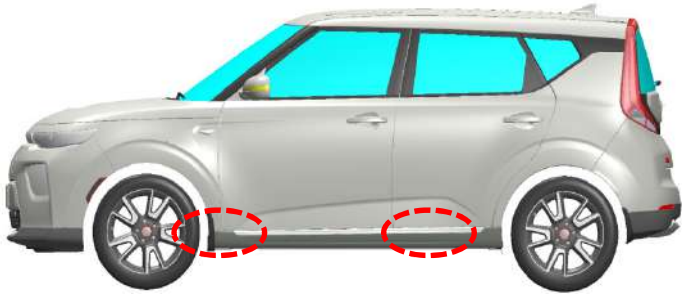

Extraction tools and procedure

When responding to an incident involving a Soul EV, we recommend that the first responders follow their organization's standard operating procedures for assessing and dealing with vehicle emergencies.

When the first responders cut the vehicle, they should always pay special attention to the airbag system, orange colored high voltage cables and other high voltage components so that the parts are not damaged, to create a risk of explosion.

Location of ultra-high strength steel

In these images, high strength steel is used in the areas colored in blue and ultra-high strength steel is used in the red colored areas. Depending on the tools used, ultra high strength steel can be challenging or impossible to cut. If necessary, use a workaround technique.

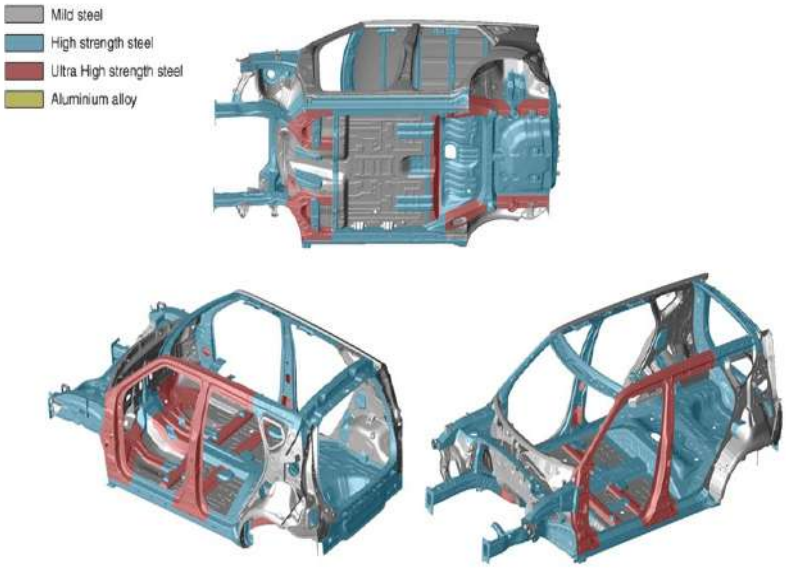

NO-CUT ZONES

The areas highlighted in yellow indicate "no-cut zones" that must not be cut during emergency procedures due to high voltage, gas inflators and airbag hazards.

⚠ DANGER

Do not attempt to enter the vehicle by cutting through the "no-cut zones" identified in the image below. Cutting through these zones can result in death by explosion or electrocution.

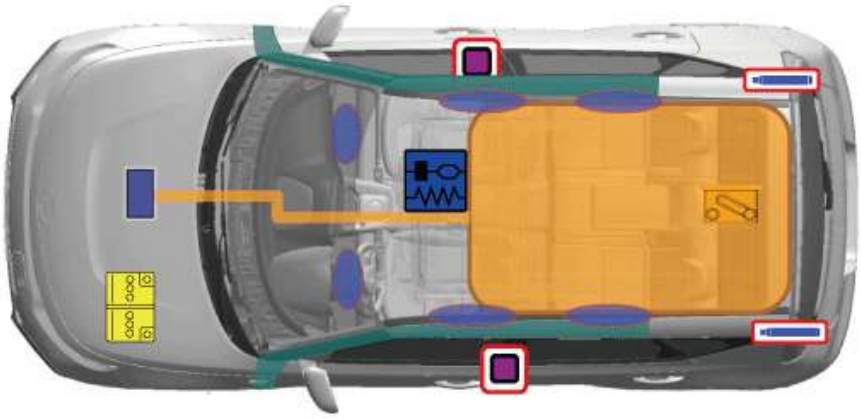

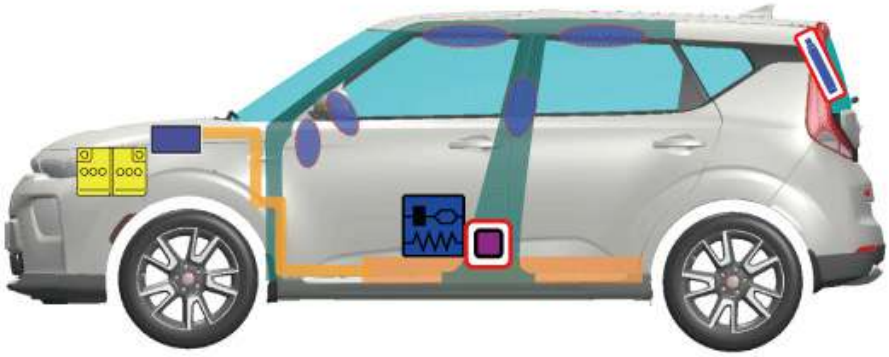

Supplemental Restraint System Control Module (SRSCM)	Airbag	Gas inflators
High voltage battery pack	12V Battery	**High voltage power cable**
Service plug	OBC (On-Board Charger)	Ultra-high strength steel

Vehicle Fire

After Initial Emergency Response Procedures have been applied, Firefighting Procedures may begin. Kia recommends that each response team follow their own department's standard operating procedures for fighting vehicle fires in combination with the Soul EV specific details that are covered in this section.

Firefighting Operations

If the high-voltage battery pack is either involved in or at risk of being involved in a fire in a Soul EV, strict precautions must be taken while conducting firefighting operations due to following reasons:

- Lithium-ion Polymer batteries contain gel electrolyte that can vent, ignite, and produce sparks when subjected to temperatures above 300°F.
- Vehicle may burn rapidly with a flare-burning effect.
- Even after the high-voltage battery fire appears to have been extinguished, renewed or delayed fire can occur.
  - Use a thermal imaging camera to ensure the high voltage battery is completely cooled before leaving the incident.
  - Always advise second responders that there is a risk of the battery re-igniting.
  - Fire, submersion or a collision that has compromised the high voltage battery, always store it in an open area with no exposures within 50 feet.
- A burning battery could release hydrogen fluoride, carbon monoxide, and carbon dioxide gasses. Use NIOSH/MSHA approved full-face self-contained breathing apparatus (SCBA) with full protective gear. Even if the high-voltage battery pack is not directly involved in a vehicle fire, approach the vehicle very carefully.

Extinguishers

- Small fires that do not involve the high voltage battery should be extinguished using an ABC fire extinguisher for an electrical fire.
- Do not attempt to extinguish fires that involve the high voltage battery with small amounts of water as this can result in electrocution. Fires that involve the high voltage battery should be extinguished using large amounts of water to cool the high voltage battery. Fire fighters should not hesitate to pour larger amounts of water on the vehicle in such scenarios.

Submerged or Partially Submerged Vehicles

Some emergency responses can involve a submerged vehicle. Soul EV that is submerged does not have high-voltage component on the vehicle's body or framework. It is safe to touch the vehicle's body or framework if there is no severe damage to the vehicle, whether it is in water or on land.
In the event of the vehicle is submerged or partially submerged, remove the vehicle from the water before attempting to disable the vehicle. Drain the water from the vehicle. Use one of the methods described in page 14-19 to disable the vehicle.

⚠ WARNING

- *If severe damage causes high voltage components to become exposed, responders should take appropriate precautions and wear appropriate insulated personal protective equipment.*
- *Do not attempt to remove a safety plug while the vehicle is in water.*

Failure to follow these instructions can lead to death or serious injury by electrocution.

High Voltage Battery Damage and Fluid Leaks

If electrolyte solution leakage, or any damage to the Lithium ion battery casing is observed, the first responders should attempt to neutralize the battery by applying a large volume of water to the battery pack while wearing appropriate Personal Protective Equipment (PPE). The neutralization process helps stabilize the thermal condition of the battery pack but does not discharge the battery.

- Cease all smoke, spark, flame around the vehicle.
- Electrolyte solution is a skin irritant.
- Do not touch or step on the spilled electrolyte.
- If electrolyte leak occurs, wear appropriate solvent resistant PPE and use soil, sand, or a dry cloth to clean up the spilled electrolyte. Be sure to adequately ventilate the area.

⚠ WARNING **Electrolyte Irritation**

The high voltage battery contains electrolyte solution. To avoid exposure to electrolyte solution and serious personal injury, always wear appropriate solvent resistant PPE (Personal Protective Equipment) and SCBA (Self-Contained Breathing Apparatus).

- *Electrolyte solution is an eye irritant – In the event of contact with eyes, rinse with plenty of water for 15 minutes.*
- *Electrolyte solution is a skin irritant. Therefore, in the event of contact with skin, wash off with a soap.*
- *Electrolyte liquid or fumes coming into contact with water will create vapors in the air from oxidization. These vapors may irritate skin and eyes. In the event of contact with vapors, rinse with plenty of water and consult a doctor immediately.*
- *Electrolyte fumes (when inhaled) can cause respiratory irritation and acute intoxication. Inhale fresh air and wash mouth with water. Consult a doctor immediately.*

Towing

In the event of an accident, the high voltage system must be disabled. The safety plug must be removed from the high voltage battery according to one of the methods described in page 14-19 to disable the vehicle.

Towing Soul EV Vehicle is not different from towing a conventional FWD vehicle.

If emergency towing is necessary, we recommend having it done by an authorized Kia dealer or a commercial tow-truck service.

Proper lifting and towing procedures are necessary to prevent damage to the vehicle.

The use of wheel dollies or flatbed is recommended.

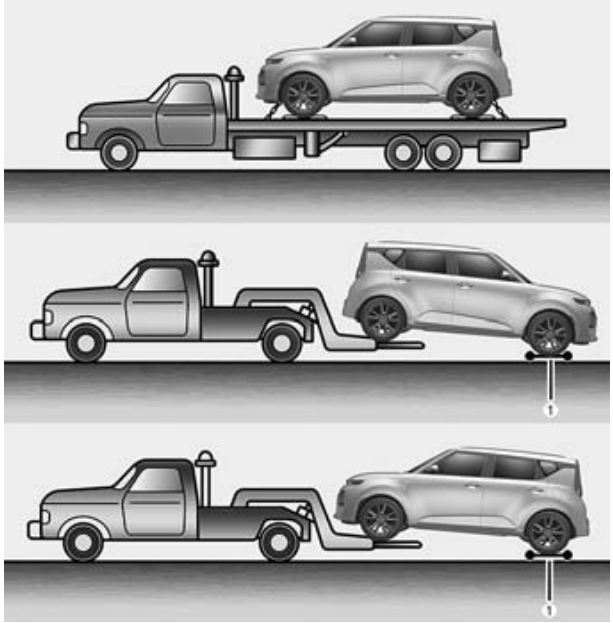

⚠ CAUTION

- *Do not tow with sling-type equipment. Use wheel lift or flatbed equipment.*
- *Never tow the vehicle with the front wheels on the ground (forward or backward), as this may cause fire or damage to the motor.*

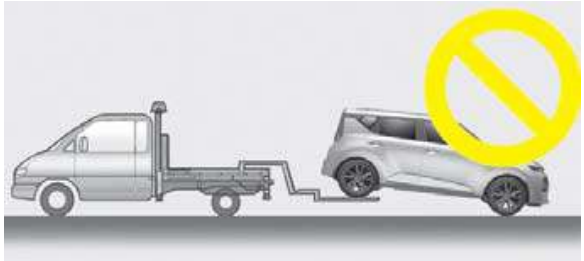

Emergency Starting

Jump Starting

Do not attempt to jump start the high voltage battery, as it cannot be jump started. In case of full discharge of the high voltage battery, the vehicle must be towed as mentioned on the previous page. In case the 12V auxiliary battery is discharged, connect a starting device to the jump terminal in the motor room as you would any 12V battery (see image). Refer to the "Emergency Starting" section of the Owner's Manual for additional information. Connect jumper cables the order shown in the image and disconnect in reverse order.

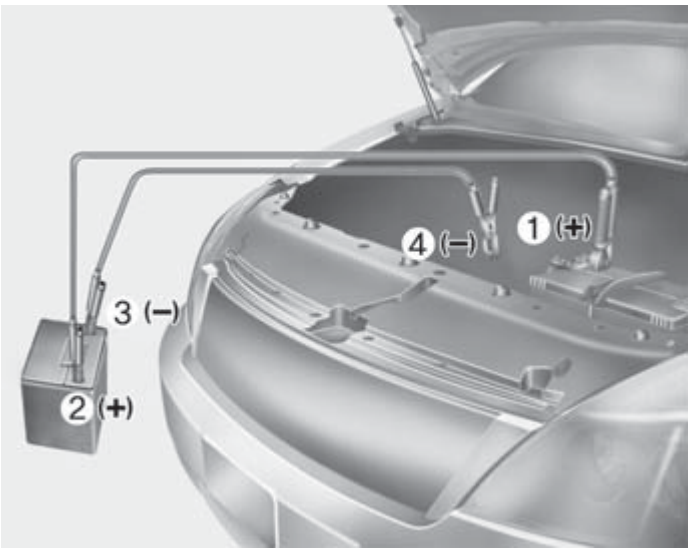

DANGER **Electrocution Risk**

Do not attempt to jump start the Soul EV high voltage battery.

Jump Starting Procedure

1. Make sure the booster battery is 12-Volt and that its negative terminal is grounded.
2. If the booster battery is in another vehicle, do not allow the vehicles to come in contact.
3. Turn off all unnecessary electrical loads.
4. Connect the jumper cables in the exact sequence shown in the illustration.
   First connect one end of a jumper cable to the positive terminal of the discharged battery (1), then connect the other end to the positive terminal on the booster battery (2). Proceed to connect one end of the other jumper cable to the negative terminal of the booster battery (3), then the other end to a solid, stationary, metallic point away from the fuse box (4).